The Economics of Land Use

Regional Transportation Impact Fee Nexus Report: A Component of Solano County Public Facility Fee

Economic & Planning Systems, Inc.
2501 Ninth Street, Suite 200
Berkeley, CA 94710-2257
510 841 9190 tel
510 841 9208 fax

Berkeley
Denver
Los Angeles
Sacramento

www.epsys.com

Acknowledgements

Prepared for:

Solano County Board of Supervisors
and
Solano Transportation Authority

Prepared by:

Economic & Planning Systems, Inc. and
Fehr & Peers

October 30, 2013

EPS #19016

Table of Contents

1. INTRODUCTION AND SUMMARY OF FINDINGS 1

Nexus Report Overview 1
Summary of Fees 2
Key Issues and Assumptions 4

2. RTIF GROWTH PROJECTIONS 6

Growth Projections 6
Use of Projections in Nexus Analysis 8
Dwelling Unit Equivalent Calculations 9

3. RTIF CAPITAL PROJECTS AND COSTS 12

RTIF Priority Projects and Costs 12
Changes to RTIF Priority Projects 16

4. RTIF NEXUS ANALYSIS AND FEE CALCULATION 17

Existing Traffic Conditions 17
Transportation Modeling 18
Calculation of Maximum Fee 22

APPENDIX A: Documentation of RTIF Facility Costs Estimates

List of Tables

Table 1 Maximum Allowable Fee Level 3

Table 2 Total RTIF Priority Project Costs 4

Table 3 RTIF Growth Forecasts by Jurisdiction (2013-2033) 7

Table 4 Land Use Growth Forecasts 9

Table 5 Dwelling Unit Equivalent Assumptions 10

Table 6 Growth Converted into DUEs (2013 – 2033) 11

Table 7 RTIF Priority Project Cost Estimates 13

Table 8 RTIF Eligible County Road Projects 15

Table 9 Eligible RTIF Transit Projects 16

Table 10 Information on Existing Traffic Conditions at RTIF Project Locations 19

Table 11 Regional Trip Percentages for Priority RTIF Projects 21

Table 12 RTIF Project Cost Per DUE 22

Table 13 Maximum Allowable Fee by Land Use Category 23

1. INTRODUCTION AND SUMMARY OF FINDINGS

The Regional Transportation Impact Fee Nexus Report (hereafter "RTIF Report"), a component of the Solano County Public Facility Fee (PFF), is designed to provide Solano County with the necessary technical documentation and nexus analysis supporting the adoption of a Regional Transportation Impact Fee. It has been prepared by Economic & Planning Systems, Inc. (EPS) and Fehr & Peers Associates Inc., for Solano County and the Solano Transportation Authority (STA). The RTIF program described herein is consistent with the most recent relevant case law and the principles of AB1600 or Government Code Section 66000 et seq ("Fees for Development Projects"; except where specific citations are provided, these statutes will be referred to in this Report as AB 1600).

This study effort was initiated by the STA and is being completed in connection with Solano County as part of its PFF update. The study process has included input from variety of stakeholders, including representatives from County jurisdictions as well as developer, housing, and environmental interests. Specifically, the methodology, assumptions and overall structure of the RTIF have been developed with both technical input from two Technical Working Groups (TWGs) consisting of staff from the County and its seven (7) municipalities. In addition, the Report incorporates guidance received by a Stakeholder Committee (SC) consisting of representatives from various community interest groups, and a Policy Committee (PC) composed of the members of the STA Board, the STA Executive Directors, and the Chief Executive Officers of the STA's member agencies.

This RTIF Report contains a number of relatively minor updates and refinements to the RTIF Report approved by the STA Board on July 10th, 2013 ("July Report"). These changes and refinement reflect on-going technical analysis that has been conducted by EPS and Fehr and Peers to ensure consistency between the July Report and the County's PFF Study, incorporate new or updated information, and address technical questions or issues that have arisen as part of both efforts. This includes updated facility cost estimates, exclusion of State inmate population, incorporation of most recent Department of Finance population estimates, and other minor changes that are documented in subsequent sections. Consequently, some of the detailed assumptions and data contained in the July Report have been refined and updated herein where appropriate, resulting in a small change in the maximum allowable fee (i.e., less than five (5) percent).

Following this introductory chapter, **Chapter 2** discusses population and employment growth potential used in this analysis and **Chapter 3** describes the methodology for identifying "priority RTIF project" and estimating their costs. **Chapter 4** describes the modeling techniques used to establish nexus for the RTIF and the resulting RTIF fee calculation by land use category.

Nexus Report Overview

The RTIF program described in this Report will provide funding for regional transportation improvements required to serve new development and to ensure that desired service levels can be achieved and/or maintained. To the extent that required improvements serve both new and existing development, or travel through the Solano County, only the portion that is attributable

to new development inside the region is included in the RTIF program. It is expected that the RTIF program funding will be augmented by other revenue sources to meet overall funding requirements, including local, State, and Federal sources.

This RTIF Report provides a schedule of fees to be established and collected as a part of the County Public Facilities Fee. The proposed RTIF program fee, if approved, will need to be included in the adoption of a County Resolution authorizing its collection as a component of the current County PFF program. The current enabling Ordinance allows the County to adopt, by Resolution, a fee schedule consistent with supporting technical analysis and findings. The Resolution approach to setting the fee allows periodic adjustments of the fee amount that may be necessary over time, without amending the enabling Ordinance.

This RTIF Report and the technical information it contains should be reviewed periodically by the County and STA as necessary to ensure its accuracy and to enable the adequate programming of funding sources. To the extent that improvement requirements, costs, or development potential changes over time, the RTIF program will need to be updated.

This RTIF Report does not determine, or advocate for, a particular fee level. Rather its purpose is to calculate the maximum allowable fee that could be charged pursuant to the requirements of AB 1600. In addition, the following considerations are important in reviewing this Report:

- The acceptance or approval of this RTIF Report does not, in itself, constitute the approval of the RTIF or a corresponding fee schedule. This can only occur through the approval of a required Resolution by the County Board of Supervisors.

- The acceptance or approval of this RTIF Report or the RTIF does not constitute approval of the construction for a particular transportation project or set of improvements. The funding and approval of the particular transportation improvements identified as part of the RTIF will be subject to the same approval and entitlement process that would applicable in the absence of this fee program.

- The acceptance or approval of this Report or the RTIF does not constitute approval for any particular land use program or project. The entitlement and permitting process for future land use development in the County and its individual jurisdictions will remain the same regardless of whether the RTIF is approved.

- Any revenue generated from fees collected as part of the RTIF must be segregated into a designated account and only used to fund RTIF projects.

Summary of Fees

A summary of the maximum RTIF fees calculated by land use category are provided in **Table 1** The fees shown represent the maximum RTIF fee that can be charged based on the nexus findings described in this Report. The maximum fees estimated assume one County-wide fee for each land use. These fees are calculated to generate sufficient revenue to cover the RTIF capital facility costs associated with new development throughout the County. The fee levels are based on the proportion of RTIF facility costs attributable to the growth in regional trips as a result of

new development in the County.[1] It should be noted that the Day Care Facility under "Institutional Land Uses" was modified from the July Report for consistency with the County PFF.

Table 1 Maximum Allowable Fee Level

Land Use Category	Maximum RTIF[1]
Residential	
Single Family Residential (SFR)	$8,282 / Unit
Multi Family Residential (MFR)	$5,135 / Unit
2nd SFR Unit/Accessory Unit	$4,446 / Unit
MFR Senior/Retirement Housing	$3,230 / Unit
Non-residential	
Retail/Commercial	$15,364 / 1,000 Sq.Ft.
Service Commercial	$38,101 / 1,000 Sq.Ft.
Assembly Uses	$2,915 / 1,000 Sq.Ft.
General/Medical Office	$9,502 / 1,000 Sq.Ft.
Hotels/Motels	$2,906 / Room
Industrial	$6,195 / 1,000 Sq.Ft.
Warehouse/Distribution	$1,126 / 1,000 Sq.Ft.
Institutional	
Health Care Facility	$7,014 / 1,000 Sq.Ft.
Congregate Care Facility	$1,656 / Unit
Private School	$30,828 / 1,000 Sq.Ft.
Day Care Facility[2]	Exempt
Agricultural Uses	
Riding Arena[3]	$7,951 / Acre
Barn	$1,060 / 1,000 Sq.Ft.

[1] The maximum RTIF is based on new regional trips. Local fee programs can also include RTIF facilities based on local trips and/or revenue shortfalls resulting from reductions to the maximum RTIF level.

[2] Differs from the July 2013 Report to be consistent with the County PFF.

[3] If a barn is included in the development than that portion of the project is charged separately based on the rate shown for "Barn".

A summary of the transportation projects and corresponding costs included in the RTIF program is provided in **Table 2.** As shown, the current project list includes eleven (11) "priority" RTIF transportation projects approved by the STA Board for an updated total cost of approximately

[1] A "regional trip" is defined in this Report as one that crosses at least one jurisdictional boundary and originates and/or terminates in a Solano County jurisdiction.

$431 million. Of this amount approximately $234 million or 54 percent is allocated to the RTIF program based on the nexus analysis.

Table 2 Total RTIF Priority Project Costs

RTIF Project	Total RTIF Project Cost		% New Regional Trips	Total RTIF Project Cost	
	Amount	% of total		Amount	% of total
#1 - Jepson Parkway	$210,682,771	48.9%	57.717%	$121,599,775	52%
#2 - Peabody Road	$5,000,000	1.2%	77.900%	$3,895,000	2%
#3 - SR 12/Pennsylvania Avenue	$50,000,000	11.6%	71.400%	$35,700,000	15%
#4 - SR 12/Church Road	$8,891,989	2.1%	34.700%	$3,085,520	1%
#5 - SR 37/Redwood Pkwy/ Fairgrounds Dr.	$66,410,000	15.4%	32.900%	$21,848,890	9%
#6 - Benicia Industrial Park Access	$20,177,474	4.7%	77.800%	$15,698,075	7%
#7 - Columbus Parkway	$1,023,221	0.2%	84.500%	$864,622	0%
#8 - North Connector	$39,456,498	9.2%	64.300%	$25,370,528	11%
#9 - SR 113 Improvements	$4,475,494	1.0%	39.200%	$1,754,394	1%
#10 County Rd. Projects	$12,435,181	2.9%	17.044%	$2,119,437	1%
#11 Regional Transit Project	$12,435,181	2.9%	17.044%	$2,119,437	1%
	---	---	---	---	
Total / Weighted Avg.	$430,987,810	100.0%	54.307%	$234,055,678	100%

The County may as a matter of policy decide to charge a fee below the maximum fee legally allowed based on the nexus calculations presented herein for any or all of the land uses.[2]

Key Issues and Assumptions

The calculation of the traffic impact fees is based on a variety of assumptions regarding land use, growth potential, service standards, and facility costs, as documented in subsequent chapters of this Report. However, some of the key issues that may warrant on-going consideration during the implementation of the RTIF program include:

- **Land Use Assumptions.** The impact fee calculations are based on commercial, industrial, and residential growth potential at buildout in Solano County through 2033. If the growth does not materialize as expected, the corresponding facilities will not be needed and/or impact fee revenue will not be sufficient to pay for facilities planned to accommodate growth. Consequently, the estimates of development and population should be periodically reviewed and updated.

[2] The revenue shortfall to the RTIF program that would result from reducing the fees must ultimately be made up by other non-RTIF revenue sources to ensure that the projects actually get built. Individual jurisdictions may elect to make up all or a portion of this shortfall through their local fee programs.

- **Travel Demand Model.** The nexus calculations and analysis used to calculate maximum fees by land use category are based on the current version of the STA travel demand model. Fehr & Peers worked with a modeling Technical Advisory Committee to validate and update the base year 2013 and build-out year 2033 assumptions embodied in this model. This model calculates the demand that projected growth will generate for regional transportation improvements and thus serves the basis for estimating a "fair share" cost allocation.

- **Eligible and Selected RTIF Projects:** The maximum fee calculated based on 11 specific transportation projects that were selected based on input from the Technical Working Group (TWG), Stakeholder Committee (SC), and Policy Committee (PC) and ultimately approved by the STA Board on May 8, 2013. These projects were also reviewed to ensure that they meet the nexus requirements of AB 1600.

- **Consistency with Local Fee Programs:** Jurisdictions in Solano County may implement their own impact fee programs which may include facilities that overlap with those included in the RTIF. To avoid double-counting (i.e. charging a developer twice for the same improvements), these local fees should be developed in a way that is cognizant of the difference (shortfall) between the maximum allowable RTIF and the actual RTIF, and of the difference between regional impacts (as defined in this study) and local impacts which may be defined differently by individual jurisdictions.

- **Cost Estimates**. The fee calculations embody facility cost assumptions that have been developed based on published studies where available, City, County and STA staff estimates, as well as additional cost analysis provided by Mark Thomas & Company, Inc., a civil engineer retained by the STA as part of the Study. The cost estimates are intended for planning purposes, and will be further refined over time as individual capital improvement projects are designed. As with the estimates of growth, the cost estimates should be periodically reviewed and updated.

2. RTIF GROWTH PROJECTIONS

The RTIF is a one-time fee levied on new development at a rate proportional to its demand for transportation capital improvements. Thus, a forecast of new development in Solano County is required to calculate the fee. This Chapter documents the land use growth assumptions used to calculate the RTIF program fee. Specifically, it describes the amount of residential, retail, and commercial/industrial land use development expected to occur in Solano County through the year 2033. These estimates are used for the following primary purposes in the fee calculation:

- Estimates of existing and future development are used to evaluate future traffic levels and determine the need for transportation improvements in Solano County.
- Estimates of future development are used to allocate the costs of required transportation improvements and ultimately to calculate a fee per unit of new growth.

The following sections describe the development projections and the key assumptions underlying them.

Growth Projections

Table 3 provides the population and employment forecasts by jurisdiction used in the RTIF modeling process which, for consistency, are the same projections being used as part of Solano County's broader PFF update. The projections incorporate a variety of analytical steps and data sources, as summarized below:

1. The County-wide population and employment growth forecasts are based on the average growth rate estimates from the most recent Association of Bay Area Governments (ABAG), California Department of Finance (DOF), and Woods & Poole (employment excludes DOF) projections.
2. The 2013 baseline population numbers used in this RTIF Report are based on actual DOF population estimates for each County jurisdiction in 2013. EPS excluded State prison inmates, estimated at 4,054 as of January 2013, from the Vacaville population estimates both in 2013 and 2033.
3. The baseline, year 2013 employment estimates at the jurisdiction level are based on benchmark estimates from the 2010 ABAG. To obtain the 2013 baseline employment estimates, EPS applied countywide annual growth rates between 2010 and 2012 in job growth based on California Employment Development Department (EDD) to the 2010 benchmark estimates.
4. The allocation of growth between these areas is based on the existing STA traffic model. Specifically, the STA model jurisdiction level forecasts have been normalized to the County total but maintain their relative growth ratios. For example, if a jurisdiction accounted for 5 percent of the County's growth through 2033 in the STA model it is assumed to account for 5 percent of growth in the PFF projection (albeit the absolute growth is adjusted to conform to the revised County total).

Table 3 RTIF Growth Forecasts by Jurisdiction (2013-2033)

Jurisdiction	Amount by Year		2013 - 2033 Growth[1]	
	2013	2033	Total	Avg. Annual
Population				
Benicia	27,163	28,507	1,344	0.24%
Dixon	18,449	25,827	7,378	1.70%
Fairfield	108,207	121,215	13,008	0.57%
Rio Vista	7,599	17,334	9,735	4.21%
Suisun City	28,234	33,342	5,108	0.83%
Vacaville[2]	88,623	101,159	12,536	0.66%
Vallejo	117,112	132,540	15,428	0.62%
Unincorporated	18,946	19,575	629	0.16%
County Total[3]	**414,333**	**479,499**	**65,166**	**0.73%**
Employment				
Benicia	14,466	16,560	2,094	0.68%
Dixon	4,489	4,754	266	0.29%
Fairfield	40,286	49,424	9,139	1.03%
Rio Vista	1,965	3,591	1,626	3.06%
Suisun City	3,192	4,232	1,040	1.42%
Vacaville	30,336	35,304	4,968	0.76%
Vallejo	32,549	40,790	8,241	1.13%
Unincorporated	8,074	8,667	593	0.35%
County Total[4]	**135,357**	**163,322**	**27,965**	**0.94%**

[1] Growth allocation among jurisdictions is based on relative growth rates assumed in the STA model.

[2] Population estimates based on California DOF 2013 population estimates (2013 Pop. estimates in the July Report were based on Census 2010 and DOF 2012 numbers). Estimates shown here have been adjusted to exclude inmate population of 4,054 (as of Jan. 31, 2013) at the State Prison in Vacaville. Inmate population data is published by the California Dept. of Corrections & Rehabilitation, Office of Research.

[3] Countywide population growth based on the average annual growth rates from ABAG, DOF, and Woods & Poole between 2010 and 2030.

[4] Countywide employment growth based on the average annual projected growth rate per ABAG and Woods & Poole projections.

Source: Economic & Planning Systems.

The projections provided above deviate slightly from those utilized in the July Report based on updated and refined analysis. Specifically, the following refinements were made to these projections:

1. **Exclusion of Prison Population**: For consistency with the County's PFF projections, EPS excluded State prison inmates, estimated at 4,054 as of January 2013, from Vacaville population estimates both in 2013 and 2033 used in the July Report.

2. **Use of Updated DOF Population Estimates**: The 2013 baseline population numbers used in this report are based on actual DOF population estimates for each County jurisdiction in 2013 (DOF publishes the city and county population numbers mid-year, and the 2013 numbers were not available when the population analysis for the July Report was prepared). The 2013 baseline population numbers in the July Report were estimated using Census 2010 County population and DOF 2012 County population estimate.[3] This update to incorporate 2013 DOF estimates increased the 2013 population estimate by 1,184.

3. **Employment Estimates**: The RTIF Report updated the transportation model to incorporate the growth implied by the most recent EDD employment estimates for 2012 (the July Report utilized slighter older estimates). Specifically, the 2013 Countywide employment estimate of 135,157 used in this RTIF Report includes 712 less jobs than used in the July Report (Table 4), a change of less than 1 percent.

As described further below and noted at the outset of the RTIF Report, these changes (combined with updates to the facility cost estimates described in **Chapter 3**) have a slight ripple effect on the RTIF calculations and corresponding tables provided herein. The overall impact on the maximum RTIF is less than 5 percent.

Use of Projections in Nexus Analysis

The regional household and employment projections provided above form the basis for developing growth forecasts by land use category that are used to estimate travel demand. Specifically, the 2013 through 2033 household and employment projections are used to estimate future residential, retail, and commercial/industrial development. For employment projections, approximately 350 square feet per retail employee and 375 square feet for all other employment categories are assumed to estimate the commercial/industrial development. **Table 4** summarizes these estimates.

[3]In the July Report, EPS applied the county-wide average annual growth rate from 2010 to 2012 to 2010 census baseline population to derive 2013 county population estimates. The 2013 county population estimated was then distributed to individual cities based on each city's relative share of countywide population.

Table 4 Land Use Growth Forecasts

Land Use Category	Existing (Year 2013)	Total Growth (2013 - 2033)
Residential[1]		
Single Family	100,391	14,000
Multi-Family	36,701	8,709
Subtotal	137,092	22,709
Employment		
Retail	29,178	6,136
Other	106,179	21,832
Subtotal	135,357	27,968
Square Feet		
Retail[2]	10,212,244	2,147,456
Other[3]	39,817,185	8,187,071
Subtotal	50,029,429	10,334,527

[1] Based on population projections in Table 3 and allocation between single-family and multi-family developed as part of the STA Travel Demand Model.
[2] Calculations assume 350 square feet per employee.
[3] Calculations assume 375 square feet per employee.

Dwelling Unit Equivalent Calculations

This analysis relies on Dwelling Unit Equivalent (DUE) factors to compare and evaluate future development across land use categories. Specifically, DUE factors compare residential, retail, and commercial/industrial land uses to one another based on their vehicle trip generation rates in order to develop a common metric for analysis. The factors used to convert residential, commercial/industrial, and retail growth into DUEs are shown in **Table 5**, and are based on standard assumptions regarding trip generation and trip diversion.[4]

[4] Assumptions based on data from the Institute of Transportation Engineers (ITE) Trip Generation Model (9th Edition) and the San Diego Council of Governments (SANDAG) Brief Guide to Vehicular Traffic Generation Rates, July 1998.

Table 5 Dwelling Unit Equivalent Assumptions

Fee Category	Unit Type	Peak Hour Trip Rate[1] a	% New Trips[2] b	DUE Calculation c = a * b
Residential				
Single Family Residential (SFR)	/ Unit	1.00	100%	1.00
Multi Family Residential (MFR)	/ Unit	0.62	100%	0.62
2nd SFR Unit/Accessory Unit	/ Unit	0.54	100%	0.54
MFR Senior/Retirement Housing	/ Unit	0.39	100%	0.39
Non-residential				
Retail/Commercial	/ 1,000 Sq.Ft.	3.71	50%	1.86
Service Commercial	/ 1,000 Sq.Ft.	9.02	51%	4.60
Assembly Uses	/ 1,000 Sq.Ft.	0.55	64%	0.35
General/Medical Office	/ 1,000 Sq.Ft.	1.49	77%	1.15
Hotels/Motels	/ Room	0.61	58%	0.35
Industrial	/ 1,000 Sq.Ft.	0.88	85%	0.75
Warehouse/Distribution	/ 1,000 Sq.Ft.	0.16	85%	0.14
Institutional				
Health Care Facility	/ 1,000 Sq.Ft.	1.16	73%	0.85
Congregate Care Facility	/ Unit	0.20	100%	0.20
Private School	/ 1,000 Sq.Ft.	6.53	57%	3.72
Day Care Facility	/ 1,000 Sq.Ft.	Exempt		
Agricultural Uses				
Riding Arena[3]	/ Acre	1.50	64%	0.96
Barn	/ 1,000 Sq.Ft.	0.16	80%	0.13

[1] Reflects average number of trips at peak hour of day for the unit type indicated based on data from the Institute of Transportation Engineers (ITE).
[2] Discount to peak trip rate to account for pass-through or loaded trips.
[3] If a barn is included in the development then that portion of the project is charged separately based on the rate shown for "Barn".

Source: Fehr & Peers.

The DUE factors described above are then used to calculate total DUE growth by land use and jurisdiction. Specifically, the land use growth forecasts presented in **Table 4** are multiplied by the DUE factors in **Table 5** to derive total DUE growth (employment estimates are converted to building square feet based on employment density assumptions). The results of these calculations are presented in **Table 6**. It should be noted that the STA travel demand model land use projections do not include the same level of detail as the Fee and DUE categories shown in **Table 5** (e.g., the STA travel demand model does not specify the number of hotel rooms, riding arenas or barns that will be developed in the County through 2033). Consequently, the

conversion from land use growth (e.g., residential units and commercial square feet) to DUE growth aggregates certain land use categories. Overall these calculations result in a 17 percent increase in DUEs countywide between 2013 through 2033.

Table 6 Growth Converted into DUEs (2013 – 2033)

Category / Jurisdiction	Single Family	Multi-Family	Retail Employment		Other Employment		Total DUEs
Land Use Growth	Units	Units	Jobs	Sq. Ft.[1]	Jobs	Sq. Ft.[2]	
Benicia	249	249	0	0	2,093	785,020	-
Dixon	2,124	189	118	41,344	147	55,077	-
Fairfield	1,530	3,174	1,824	638,322	7,314	2,742,834	-
Rio Vista	2,519	1,283	368	128,645	1,258	471,916	-
Suisun City	3,820	681	1,627	569,459	3,341	1,252,866	-
Vacaville	2,520	2,643	2,094	732,881	6,147	2,305,146	-
Vallejo	1,112	487	105	36,753	935	350,622	-
Unincorporated	125	3	0.1	52	596	223,590	-
Total	**14,000**	**8,709**	**6,136**	**2,147,456**	**21,832**	**8,187,071**	
DUE Conversion Factor (see Table 5)	1.00 Per Unit	0.62 Per Unit		1.86 Per KSF		0.60 Per KSF	
DUE Growth[3]							
Benicia	249	155		0		468	871
Dixon	2,124	117		77		33	2,351
Fairfield	1,530	1,968		1,184		1,633	6,316
Rio Vista	2,519	795		239		281	3,835
Suisun City	3,820	422		1,056		746	6,045
Vacaville	2,520	1,639		1,359		1,373	6,891
Vallejo	1,112	302		68		209	1,691
Unincorporated	125	2		0		133	260
Total	**14,000**	**5,400**		**3,984**		**4,876**	**28,259**
Existing DUEs	100,391	22,755		18,944		23,713	165,802
% Growth	14%	24%		21%		21%	**17%**

[1] Square feet estimates assume an average of 350 square feet per employee.

[2] Square feet estimates assume an average of 375 square feet per employee.

[3] For residential uses, DUE calculation involves multiplying no. of units in the top part of the table by the DUE conversion factor per unit. For employment uses, DUE calculation involves dividing the sq. ft. by 1,000 and multiplying the result by the DUE factor per KSF (KSF = 1,000 sq. ft.)

Source: Fehr & Peers.

3. RTIF CAPITAL PROJECTS AND COSTS

This chapter documents the transportation improvements included in the initial RTIF capital project list and their corresponding costs. The RTIF capital project list includes all the projects that are assumed to be funded, in full or in part, by RTIF revenue and thus form the basis for the fee calculation. To meet the requirements of AB 1600, the transportation facilities included in the RTIF project list are needed in whole or in part to accommodate the impacts of growth in the County.

RTIF Priority Projects and Costs

As part of the RTIF study process, the STA convened numerous study sessions and public meetings with staff from the County's eight jurisdictions and other stakeholders to identify the priority projects that would be included in the regional fee program that will be impacted by regional growth throughout the County.[5] In addition, all of the projects proposed and ultimately included in the RTIF Priority Project list have been reviewed to ensure consistency with the requirements of AB 1600. Based on this input and analysis, a final "RTIF Priority Project" list has been approved by the STA Board on May 8, 2013.

A description of the RTIF Priority Project list used to develop the fee calculated in this RTIF Report is provided in **Table 7**. As shown, there are 11 separate proposed RTIF projects with an estimated total updated capital cost of about $431 million. The cost estimates and updates are further documented in **Appendix A** and are based on the best information available at the time of this Report.

To the extent that this project list and/or the corresponding cost estimates are updated, the maximum fee amount will change accordingly. In this regard it should be noted that project costs have been updated since the STA Board approved the July Report to reflect updated research for the County PFF. These changes increased the total costs of RTIF facilities by about $3.2 million, or 0.8 percent. In addition, the list of eligible Express Bus Transit Centers and Train Stations projects was updated as follows:

1. The Fairfield /Vacaville Train Station, next phase project has been added to the list. This project, although approved by STA Board on May 8, 2013, was inadvertently excluded from the list of eligible projects for Express Bus Transit Centers and Train Stations expenditures on Table 7 of the July Report.

2. The Vallejo Station or Curtola Park & Ride, next phase project has been separated into two discrete projects. These two projects were combined into one project in the July Report.

---

[5] The project list was developed based on input from two Technical Working Groups (TWGs) consisting of staff from the County and its seven (7) municipalities. In addition, it incorporates policy guidance received by a Stakeholder Committee (SC) consisting of representatives from various community interest groups, and a Policy Committee (PC) composed of the members of the STA Board, the STA Executive Directors, and the Chief Executive Officers of the STA's member agencies.

Table 7 RTIF Priority Project Cost Estimates

RTIF Project	Project Description	Project Cost Estimates[1]
#1 - Jepson Parkway	Construct remaining segments of Jepson Parkway, including Canon Road embankment	$210,682,771
#2 - Peabody Road	New Canon Rd. to Fairfield City Limits, widen from 2 to 4 lanes	$5,000,000
#3 - SR 12/Pennsylvania Avenue	Construct new interchange	$50,000,000
#4 - SR 12/Church Road	Improve intersection	$8,891,989
#5 - SR 37/Redwood Pkwy/ Fairgrounds Dr.	Widen roads and improve interchanges	$66,410,000
#6 - Benicia Industrial Park Access	Add traffic signals and better accommodate trucks at I-680/Lake Herman Rd, and I-680/Park/Industrial	$20,177,474
#7 - Columbus Parkway	Add traffic signal at Columbus/ Rose and improve westbound approach	$1,023,221
#8 - North Connector	Construct North Connector from Business Center Drive to SR 12	$39,456,498
#9 - SR 113 Improvements	TSM, TDM and ITS (e.g. incentives for carpooling, transit services, Park and Ride facilities, advance swerve warning signs, speed feedback signs and fog detection or closed circuit TV)	$4,475,494
#10 County Rd. Projects	Unincorporated County roadway improvements that address new growth impacts (see RTIF Eligible County Road Projects)	$12,435,181 [2]
#11 Express Bus Transit Centers and Train Stations	County-wide Express Bus Transit Centers and Train Stations that address new growth impacts (see Table 9)	$12,435,181 [2]
Total RTIF Priority Projects Cost		**$430,987,810**

[1] See Appendix A for detailed assumptions and documentation.
[2] Calculated based on 5% percent of total DUE revenue assuming a fee of $1,500 / DUE. See Table A-7 in Appendix A for further detail.

The fee calculations embody facility cost assumptions that have been developed based on published studies where available, City, County and STA staff estimates, as well as additional cost analysis provided by Mark Thomas & Company, Inc., a civil engineer retained as part of the Study. Costs from studies published before 2013 were translated into year 2013 dollars using the Engineering News Record (ENR) construction cost index for the San Francisco Bay Area. The cost estimates are intended for planning purposes only, and will be refined over time as individual capital improvement projects are further developed and designed.

County Road and Transit Projects

In addition to discrete transportation projects, this RTIF Report includes two additional packages of improvements to address the impact of growth on the regional transportation system. One package includes major regional transit facilities, which could be either train stations or intermodal transfer centers that serve regional and express bus lines. The other package includes improvements to rural roads in unincorporated County areas that are affected by growth in the incorporated cities. It is proposed that 5 percent of the RTIF revenue be directed to each of these project packages. The total cost for these packages is based on the maximum allowable nexus, as described further in the subsequent chapter and also documented in **Appendix A**.

The STA in consultation with Solano County, the County Transit Operators and other stakeholders has developed an eligibility list of County road and Transit projects that will be eligible for the 5 percent RTIF revenue allocation. The list of eligible transit projects and preliminary cost estimates are summarized in **Table 8** and **Table 9** based on information assembled by the STA. It is important to note that the maximum RTIF fee is not derived based on this project list or corresponding costs. Rather it is calculated based on 5 percent of total RTIF revenue. This list of eligible facilities and cost estimates is provided in this RTIF Report for information purposes only.

Table 8 RTIF Eligible County Road Projects

Road Name	Begin Location	End Location	Cost to Upgrade[1]
ABERNATHY ROAD	Suisun Parkway	Mankas Corner Road	$5,380,000
AZEVEDO ROAD	SR 12	Canright Road	$1,380,000
CANRIGHT ROAD	McCormack Road	0.5 mi e/Azevedo Road	$430,000
CHERRY GLEN ROAD	I-80 at Lyon Road	Vacaville c/l (at I-80)	$5,740,000
CORDELIA ROAD	I-680	Suisun City c/l	$7,700,000
FOOTHILL ROAD	Vacaville c/l	Pleasants Valley Road	$450,000
LAKE HERMAN ROAD	Vallejo c/l	Benicia c/l	$1,210,000
LOPES ROAD	Fairfield c/l	Lake Herman Road	$19,090,000
LYON ROAD	Fairfield c/l	Cherry Glen Road	$6,930,000
MANKAS CORNER ROAD	Abernathy Road	Fairfield c/l	$2,920,000
McCLOSKEY ROAD	SR 12	McCormack Road	$430,000
McCORMACK ROAD	SR 113	Rio Vista c/l	$5,330,000
MIDWAY ROAD	I-80 at Vacaville c/l	SR 113	$9,490,000
PEDRICK ROAD	Midway Road	Yolo County Line	$14,830,000
PITT SCHOOL ROAD	Midway Road	Dixon c/l	$580,000
PLEASANTS VALLEY ROAD	Cherry Glen Road	Vaca Valley Road	$1,280,000
PORTER ROAD	Midway Road	Dixon c/l	$665,000
ROCKVILLE ROAD	I-80	Suisun Valley Road	$11,430,000
SUISUN VALLEY ROAD	Fairfield c/l	Rockville Road	$3,330,000
VACA VALLEY ROAD	Pleasants Valley Road	Vacaville c/l	$455,000
TOTAL			**$99,050,000**

[1] Based on data provided by Solano County Public Works.

Table 9 Eligible RTIF Transit Projects

Project Name	Cost Estimate[1]
Benicia Industrial Park Multi-modal Transit Center	$1,800,000
Dixon Multimodal Transportation Center	$27,800,000
Fairfield Transportation Center, next phase	$25,000,000
Fairfield/Vacaville Train Station, next phase[2]	$8,609,720
360 Project Area Transit Center	$295,640
Vallejo Station, next phase	$10,000,000
Curtola Park & Ride, next phase	$10,000,000
Vacaville Transportation Center, next phase	$10,500,000
Suisun City Train Station improvements	$650,000
Total	**$94,655,360**

[1] Cost estimates provided by STA based on a variety of sources. Costs are for information purposes only and not used in the calculation of the maximum RTIF.
[2] Reflects net cost (i.e., total project costs of $68,975,600 less identified revenues of $60,365,880).

Changes to RTIF Priority Projects

While the initial RTIF Priority Project List was adopted as part of the July Report and now included in this RTIF Report, it is recognized that the list of transportation projects may need to be amended over time as circumstances change. In other words, the STA and participating jurisdictions will need to update the RTIF priority project list on a periodic basis as development occurs. Typically this would occur on a 5-year basis concurrent with AB 1600 statutory requirements for updating development impact fee programs.

4. RTIF NEXUS ANALYSIS AND FEE CALCULATION

This chapter describes the modeling techniques used to establish the basis for calculating the fee for the RTIF program. The fee per DUE is based on the cost of RTIF Priority Projects that can be attributable to new growth within Solano County divided by projected number of DUEs in the County.

Existing Traffic Conditions

By definition, a fee program charges fees to new development in order to fund transportation improvements necessary to serve the demand and impacts generated by that new development. The following procedure was used to determine if any of the transportation projects identified for inclusion in the RTIF are at locations that experience current traffic problems.

Available traffic analysis studies and reports were consulted, and the analysis of current traffic operations reported in those studies was reviewed to determine if any of the proposed RTIF projects are located on road facilities that currently operate at a level worse than LOS D during the peak hour; if that is the case, then that RTIF project would be at a location that is currently an "existing deficiency", and the cost of the capital improvement at that location would need to be divided between existing development and new development in proportion to their relative contribution to the deficiency.

For any location where there is an existing deficiency, the cost share attributable to new development, and therefore included in the RTIF, is calculated as follows:

1. Quantify the existing deficiency by determining the current traffic volumes that exceed the available capacity. For example, if a facility with a theoretical capacity of 2,000 vehicles is currently carrying 2,100 vehicles, the existing deficiency would be calculated as 2,100 – 2,000 = 100.

2. Determine the future traffic growth by subtracting the current traffic volumes from the forecasted future traffic volumes. For example, if the future demand on that facility is projected to be 2,500 vehicles, the future traffic growth would be calculated as 2,500 – 2,100 = 400.

3. Define the overall benefit of the project as the correction of the existing deficiency (from number 1 above) plus the accommodation of future growth (from number 2). In our example, the overall benefit of improving the road would be to correct the existing deficiency of 100 vehicles and to accommodate the future growth of 400 vehicles, for a total benefit of 500.

4. Calculate new development's share of the benefit as the result of number 2 divided by number 3. In this case, the share of the benefit to new development would be 80 percent, or 400 divided by 500. Therefore, 80 percent of the project cost would be included in the fee program. The remaining 20 percent of the project cost would need to be funded through other sources.

Existing Deficiency Evaluation

The results of the review of existing traffic information are shown in **Table 10**. As shown in that table, there was one location along the proposed Jepson Parkway project (at the intersection of Peabody Road and Cement Hill Road) where the traffic analysis results from a recent traffic study indicated peak hour operations at worse than LOS D conditions. This location was thus identified as an existing deficiency. The other RTIF projects did not have existing deficiencies.

The Jepson Parkway project involves a long corridor that extends between Fairfield and Vacaville. An existing deficiency was identified at a single location along that corridor. While that single location does not reflect conditions along the entire corridor, for the purposes of presenting a very conservative fee calculation it was decided to apply an existing deficiency discount to the total cost of the Jepson Parkway project. As part of the recently-adopted City of Fairfield traffic impact fee program update, an existing deficiency discount was calculated, per the approach outlined above, for the intersection of Peabody Road and Cement Hill Road; the resulting discount was calculated at 1 percent. Therefore, it is recommended that the cost of the Jepson Parkway project that is included in the RTIF be reduced by 1 percent.

Transportation Modeling

The adopted regional Solano-Napa Travel Model, which is the modeling tool approved for use in regional transportation planning efforts in Solano County, was used to establish the nexus between new development in Solano County and the capital improvement projects proposed for inclusion in the RTIF program. Information related to the proposed RTIF program was incorporated into the STA regional travel model, and a series of analyses were conducted to determine the proportion of usage on each RTIF facility that comes from new development in the Solano County region.

Background Assumptions

For the purposes of conducting the year 2033 RTIF analysis, it was necessary to determine what other, non-RTIF capital improvements are anticipated to be constructed by 2033. Based on direction from STA staff, the following improvements were assumed to be in place regardless of the status of the RTIF program:

- HOV/HOT lanes on I-80 and I-680 throughout the County
- Completion of Phase 1 of the I-80/I-680/SR 12 interchange improvements
- Widening of SR 12 West (Jameson Canyon) to 4 lanes from Red Top Road to SR 29

This is not intended to be an exhaustive list of all projects that would be constructed by 2033, but is intended to capture the most significant, large regional projects that are planned to be completed during that period. Undoubtedly there would be a number of local projects that could be completed during this timeframe, but for the purposes of the RTIF it is most important to capture the major regional projects and the effects those might have on regional traffic patterns.

Table 10 Information on Existing Traffic Conditions at RTIF Project Locations

RTIF Project	Source of Traffic Analysis Information	Traffic Analysis Result	Existing Deficiency?	Deficiency Percentage*
#1 - Jepson Parkway	Fairfield Train Station Specific Plan Recirculated Draft EIR, City of Fairfield, February 2011, Table 4.14-4.	Peak hour LOS E at intersection of Peabody Rd/ Cement Hill Rd; all other intersections in vicinity of Jepson Parkway at peak hour LOS D or better	Yes	1%
#2 - Peabody Road	Fairfield Train Station Specific Plan Recirculated Draft EIR, City of Fairfield, February 2011, Table 4.14-4.	Peak hour LOS D or better at all study intersections in vicinity of proposed project	No	N/A
#3 - SR 12/Pennsylvania Avenue	SR 12 Comprehensive Evaluation and Corridor Management Plan, STA, November 2012, page 4-15.	Peak hour LOS D or better	No	N/A
#4 - SR 12/Church Road	SR 12 Comprehensive Evaluation and Corridor Management Plan, STA, November 2012, page 4-15.	Peak hour LOS D or better	No	N/A
#5 - SR 37/Redwood Pkwy/ Fairgrounds Dr.	Redwood Parkway - Fairgrounds Drive Improvements Traffic Operations Analysis Report, STA, 2011, Table 16.	Peak hour LOS D or better at all study intersections in vicinity of proposed project	No	N/A
#6 - Benicia Industrial Park Access	Valero Improvement Project Addendum to VIP EIR, City of Benicia, June 2008, page 3-43.	Peak hour LOS D or better at all study intersections in vicinity of proposed project	No	N/A
#7 - Columbus Parkway	Bordoni Ranch Project EIR, City of Vallejo, July 2004, Table IV.C-8.	Peak hour LOS D or better at intersection of Columbus Parkway/Rose Drive	No	N/A
#8 - North Connector	North Connector Project Draft EIR, STA, January 2008, Table 4.2-2	Peak hour LOS D or better at all study intersections in vicinity of proposed project**	No	N/A
#9 - SR 113 Improvements	SR 113 Major Investment Study Final Report, STA, May 2009, Table 2.4	Peak hour LOS D or better at all roadway segments studied	No	N/A

* Deficiency Percentage is calculated as the amount of traffic volume that is currently over-capacity at that intersection, as a proportion of the total future growth in traffic volume projected. The project cost to be included in the STA RTIF program should be reduced by this deficiency percentage. For the intersection of Peabody Rd/Cement Hill Rd, the deficiency percentage was calculated as part of the City of Fairfield Traffic Impact Fee Program update, adopted by the Fairfield City Council in May 2013.

** The North Connector Project Draft EIR referenced above did find LOS F conditions at one intersection, at SR 12/Red Top Road. Since the study was completed, that intersection has been modified as part of the ongoing SR 12 Jameson Canyon widening project. Therefore, the LOS results reported at that intersection from the North Connector Project Draft EIR are no longer reflective of current operations, and that intersection is not identified as an existing deficiency.

Modeling Procedure

Using the STA regional travel model, the trip tables were separated into "baseline" and "growth" trip tables. The baseline trip table came from the 2013 model, and was subtracted from the 2033 trip table to produce a "growth" table that would represent the trips generated by new development. This is an important step since the fee will be charged only to new development, and is based on an evaluation of that new development's effects on the RTIF projects. The baseline and growth trip tables were then assigned simultaneously to a year 2033 network that reflected the assumed projects described above as well as the proposed RTIF projects. This method allows for the production of a year 2033 traffic assignment, while still allowing each trip to be characterized as either part of the baseline or part of the growth increment.

Since the RTIF is a regional fee program, it is also important to identify the proportion of traffic on each facility that is regional in nature. For the purposes of this analysis, trips have been divided into regional and non-regional types. Regional trips are those trips that cross at least one jurisdictional boundary (e.g., trips that travel between two different jurisdictions in the County, or that have one end inside the County and one end outside the County). Non-regional trips would be all other types of trips, including those that pass through the County without stopping, or those trips that remain entirely within a single jurisdiction.[6] One way of determining the "regional significance" of a project, then, would be to look at the percentage of regional trips that are anticipated to use that facility. This RTIF fee is based on growth in regional trips only.

Results

The results are shown in **Table 11**. The table lists each of the RTIF projects and shows the percentage of the new traffic on the facility (i.e., the traffic resulting from new growth in Solano County) that falls within the category of regional trips, as described above. The percentage of new regional traffic on each facility will be used as the percentage of that facility's improvement cost that will be considered eligible for inclusion in the RTIF program.

[6] Note that local jurisdictions may be using different definitions of "regional" and "non-regional" trips in their local fee programs than the definitions used for the purposes of this RTIF analysis.

Table 11 Regional Trip Percentages for Priority RTIF Projects

RTIF Project	Existing Deficiency (see Table 10)	% of New Regional Vehicle Trips[1]	RTIF Cost Allocation
	a	b	= (1-a) * b
#1 - Jepson Parkway	1.000%	58.3%	57.717%
#2 - Peabody Road	0.000%	77.9%	77.900%
#3 - SR 12/Pennsylvania Avenue	0.000%	71.4%	71.400%
#4 - SR 12/Church Road	0.000%	34.7%	34.700%
#5 - SR 37/Redwood Pkwy/ Fairgrounds Dr.	0.000%	32.9%	32.900%
#6 - Benicia Industrial Park Access	0.000%	77.8%	77.800%
#7 - Columbus Parkway	0.000%	84.5%	84.500%
#8 - North Connector	0.000%	64.3%	64.300%
#9 - SR 113 Improvements	0.000%	39.2%	39.200%
#10 County Rd. Projects[2]	82.956%	100.0%	17.044%
#11 Regional Transit Projects[2]	82.956%	100.0%	17.044%

[1] Regional trips are defined in this Report as those that include more than one jurisdiction and originate or terminate somewhere in Solano County.
[2] Cost allocation assumed to equal approx. 17% of total project costs, or the projected increase in County DUEs from 2013 - 2033. See Table A-7 in Appendix A for further detail.

It should be noted that the intent of this analysis was solely for the purposes of the RTIF process. The primary result is the percentage of new trips projected to use each facility that are regional (i.e., that involve travel between Solano County jurisdictions, or between a jurisdiction inside the County and another outside the County). It is not intended for these results to be used to determine the appropriate size or configuration for any particular facility, or to directly support any project-specific planning activities.

As described earlier, the RTIF program also includes a set of regional transit and County road projects. Neither of these packages lends itself to being directly modeled using the regional Solano-Napa Travel Model described in this chapter. However, it is reasonable to include facilities such as these in a regional fee program, since by their nature they serve regional travel between jurisdictions in Solano County or between Solano County and neighboring counties.

These regional transit and County road projects are expected to benefit all County residents and workers, both those that are already in the County and those that will come to the County as a result of new development. Because it is not possible to directly model these projects using the regional Solano-Napa Travel Model, thus making it difficult to calculate the usage of these specific facilities by travelers generated by new development, it is instead proposed that the proportion of the projects' costs considered eligible for RTIF funding be calculated as the proportion of the total future population and employment in the County that is contributed by new development. That percentage is 17 percent; that is, 17 percent of the total future

population and employment in Solano County is anticipated to occur as a result of new growth during the planning horizon covered by this study.

Calculation of Maximum Fee

As described in **Chapter 2**, this analysis relies on DUE factors to compare and evaluate future development across land use categories. The maximum fee calculation is based on the net RTIF capital project costs attributable to new growth throughout the County divided by the projected number of new housing units, retail and commercial square feet developed in the Solano County from 2013 through 2033. Specifically, the capital project costs (see **Table 7**) is divided by the total DUE growth by land use, calculated in **Table 6**, to obtain total cost per DUE. This calculation is summarized in **Table 12**.

Table 12 RTIF Project Cost Per DUE

RTIF Project	Total RTIF Project Cost a (see Table 7)	RTIF Cost Allocation b (see Table 11)	RTIF Costs c = a * b	Maximum Fee / DUE = c / Total DUE growth, or 28,259
#1 - Jepson Parkway	$210,682,771	57.717%	$121,599,775	
#2 - Peabody Road	$5,000,000	77.900%	$3,895,000	
#3 - SR 12/Pennsylvania Avenue	$50,000,000	71.400%	$35,700,000	
#4 - SR 12/Church Road	$8,891,989	34.700%	$3,085,520	
#5 - SR 37/Redwood Pkwy/ Fairgrounds Dr.	$66,410,000	32.900%	$21,848,890	
#6 - Benicia Industrial Park Access	$20,177,474	77.800%	$15,698,075	
#7 - Columbus Parkway	$1,023,221	84.500%	$864,622	
#8 - North Connector	$39,456,498	64.300%	$25,370,528	
#9 - SR 113 Improvements	$4,475,494	39.200%	$1,754,394	
#10 County Rd. Projects[1]	$12,435,181	17.044%	$2,119,437	
#11 Regional Transit Project[1]	$12,435,181	17.044%	$2,119,437	
	---	---	---	
Total / Weighted Avg.	$430,987,810	54.307%	$234,055,678	**$8,282**

[1] Calculated based on 5% percent of total DUE revenue assuming a fee of $1,500 / DUE. Cost allocation assumed to equal 17% of total project costs, or the percent increase in County DUEs from 2013 - 2033. See Table A-7 in Appendix A.

A summary of the maximum RTIF per DUE by land use is provided in **Table 13**. The actual fees by land use category are derived based on the DUE factors shown in **Table 5** (total fee per DUE multiplied by the DUE factor by land use category). As noted, the RTIF provides a single fee representing the entire County. To the extent that the costs are reduced because of outside funding sources, changed facility requirements, or reduced DUE growth, the fee would be reduced by a proportionate amount.

Table 13 Maximum Allowable Fee by Land Use Category

Fee Category	Unit Type	Peak Hour Trip Rate[1]	% New Trips[2]	DUE Calculation	Max. Fee Per Unit
		a	b	c = a * b	= c * $8,282 (see Table 12)
Residential					
Single Family Residential (SFR)	/ Unit	1.00	100%	1.00	$8,282
Multi Family Residential (MFR)	/ Unit	0.62	100%	0.62	$5,135
2nd SFR Unit/Accessory Unit	/ Unit	0.54	100%	0.54	$4,446
MFR Senior/Retirement Housing	/ Unit	0.39	100%	0.39	$3,230
Non-residential					
Retail/Commercial	/ 1,000 Sq.Ft.	3.71	50%	1.86	$15,364
Service Commercial	/ 1,000 Sq.Ft.	9.02	51%	4.60	$38,101
Assembly Uses	/ 1,000 Sq.Ft.	0.55	64%	0.35	$2,915
General/Medical Office	/ 1,000 Sq.Ft.	1.49	77%	1.15	$9,502
Hotels/Motels	/ Room	0.61	58%	0.35	$2,906
Industrial	/ 1,000 Sq.Ft.	0.88	85%	0.75	$6,195
Warehouse/Distribution	/ 1,000 Sq.Ft.	0.16	85%	0.14	$1,126
Institutional					
Health Care Facility	/ 1,000 Sq.Ft.	1.16	73%	0.85	$7,014
Congregate Care Facility	/ Unit	0.20	100%	0.20	$1,656
Private School	/ 1,000 Sq.Ft.	6.53	57%	3.72	$30,828
Day Care Facility	/ 1,000 Sq.Ft.	Exempt			
Agricultural Uses					
Riding Arena[3]	/ Acre	1.50	64%	0.96	$7,951
Barn	/ 1,000 Sq.Ft.	0.16	80%	0.13	$1,060

[1] Reflects average number of trips at peak hour of day for the unit type indicated based on data from the Institute of Transportation Engineers (ITE).
[2] Discount to peak trip rate to account for pass-through or loaded trips.
[3] If a barn is included in the development then that portion of the project is charged separately based on the rate shown for "Barn".

APPENDIX A:

Documentation of RTIF Facilities Cost Estimates

APPENDIX A: DOCUMENTATION OF RTIF FACILITIES COST ESTIMATES

This Appendix provides documentation for the construction cost estimates assumed as a basis for calculating the RTIF. While the cost estimates are derived from a variety of sources as documented herein, all estimates have been reviewed by the Solano Transportation Authority for use in the RTIF. It should be noted that that project costs have been updated since the July Report to reflect updated research. These changes increased the total costs of RTIF facilities by about $3.2 million, or 0.8 percent.

As described in the RTIF Report, the transportation projects selected for inclusion in the RTIF study were the result of many meetings over the last three years with several key advisory groups, including a technical working group, a stakeholder group, and a policy advisory group. These groups include representation from all of the jurisdictions in the County. Starting with a very extensive list of about 90 possible projects, those groups worked to narrow the list and reach consensus on a set of projects that could be agreed upon as representing high-priority regional transportation investment needs.

Cost Estimate Summary

A summary of the RTIF program costs is provided in **Table A-1** and further detail for individual projects is provided below. The facility cost assumptions that have been developed are based on published studies that were available and City, County and STA staff input, as well as additional cost analysis provided by Mark Thomas & Company, Inc., a civil engineering firm retained by the STA as part of the Study. The cost estimates are intended for planning purposes, and is anticipated to be further refined over time as individual capital improvement projects are designed. The estimates will be periodically reviewed and updated as new information becomes available through the planning process and design process with revised estimates incorporated into updated RTIF calculations and nexus analysis, a process that generally occurs every five (5) years.

Table A-1 Summary of RTIF Estimated Project Costs

RTIF Project	Project Description	Project Cost Estimates[1]
#1 - Jepson Parkway	Construct remaining segments of Jepson Parkway, including Canon Road embankment	$210,682,771
#2 - Peabody Road	New Canon Rd. to Fairfield City Limits, widen from 2 to 4 lanes	$5,000,000
#3 - SR 12/Pennsylvania Avenue	Construct new interchange	$50,000,000
#4 - SR 12/Church Road	Improve intersection	$8,891,989
#5 - SR 37/Redwood Pkwy/ Fairgrounds Dr.	Widen roads and improve interchanges	$66,410,000
#6 - Benicia Industrial Park Access	Add traffic signals and better accommodate trucks at I-680/Lake Herman Rd, and I-680/Park/Industrial	$20,177,474
#7 - Columbus Parkway	Add traffic signal at Columbus/ Rose and improve westbound approach	$1,023,221
#8 - North Connector	Construct North Connector from Business Center Drive to SR 12	$39,456,498
#9 - SR 113 Improvements	TSM, TDM and ITS (e.g. incentives for carpooling, transit services, Park and Ride facilities, advance swerve warning signs, speed feedback signs and fog detection or closed circuit TV)	$4,475,494
#10 County Rd. Projects	Unincorporated County roadway improvements that address new growth impacts (see RTIF Eligible County Road Projects)	$12,435,181
#11 Express Bus Transit Centers and Train Stations	County-wide Express Bus Transit Centers and Train Stations that address new growth impacts (see Table 9)	$12,435,181
Total RTIF Priority Projects Cost		**$430,987,810**

[1] Cost revisions based on updated sources and assumptions. Detail assumptions presented below for each facility.

Cost Escalators

Because a number of project cost estimates were prepared between 2008 and 2010, this analysis relies on published cost escalators that measure the average change in construction costs between 2013 and the specific year cost estimates were initially prepared. The Construction Cost Index for San Francisco published by Engineering News Record (ENR) is used to calculate escalation factors, as summarized in **Table A-2**.

This analysis has not applied a cost escalator for land right-of-way (ROW) acquisition costs. According to MSA-level Land Price Indexes published by the Lincoln Institute of Public Policy,[1] land prices in the Sacramento metropolitan area[2] declined markedly during the recent recession but have been trending up in the last two years and are now close to 2009/10 levels when most project cost estimates were prepared.

Table A-2 Cost Indices and Construction Cost Escalators

Cost Year	San Francisco Construction Cost Index (March)	2013 Construction Cost Escalators Relative to Cost Year
2008	9,150.17	13.31%
2009	9,757.67	6.26%
2010	9,728.17	6.58%
2011	10,151.04	2.14%
2012	10,369.54	-0.01%
2013	10,368.09	-

Source: Engineering News Record

Assumptions for Individual Facilities

Further detail on the cost estimation assumptions for each of the RTIF transportation facilities is provided below.

1. Jepson Parkway

The Jepson Parkway Project proposes to upgrade existing roadways to create a continuous north-south arterial in central Solano County connecting Vacaville and Fairfield. The project would provide a four-lane divided arterial for the entire length of the corridor and includes improvements to Walter Road, Cement Hill Road, Vanden Road, and Leisure Town Road. Original cost estimates for the Project are provided in the Jepson Parkway Project Technical Report released by the STA in February 19, 2009. This detailed cost estimate included roadway items, structure items, right-of-way, utilities, and support costs on a segment by segment basis for a total Project cost of $186.7 million (see **Exhibit A**). According to the STA, these cost estimates represent uncompleted portions of the Jepson Parkway only. This revised cost was adjusted for cost inflation and is now estimated at $197.7 million (in 2013 dollars) as shown in **Table A-3**.

[1] Davis, Morris A. and Michael G. Palumbo, 2007, "The Price of Residential Land in Large US Cities," Journal of Urban Economics, vol. 63 (1), p. 352-384; data located at Land and Property Values in the U.S., Lincoln Institute of Land Policy http://www.lincolninst.edu/resources/.

[2] EPS believes that changes in land prices in Solano County are more likely to be consistent with the Sacramento metropolitan area rather than the San Francisco metro area. Therefore, while construction cost escalation is based on a San Francisco index, land costs escalation is based on a Sacramento metropolitan area index.

In addition, STA provided additional costs prepared by HDR to be added to Jepson Parkway Project for the construction of an embankment at Canon Road, for a grand total project cost of $210.7 million (2013 dollars).

Table A-3 Jepson Parkway Revised Project Cost Estimate (2013 dollars)

Cost Item	Engineer's Cost Estimate (2009$)	Cost Escalator	Revised Cost Estimate (2013$)
Right-Of-Way	$10,774,000	0.00%	$10,774,000
Utilities	$2,927,500	6.26%	$3,110,638
Construction (Roadway/Structures)	$141,776,667	6.26%	$150,645,927
Support (22% of construction costs)[1]	$31,190,867		$33,142,104
Subtotal	**$186,669,034**		**$197,672,669**
Canon Road Embankment[2]			
Construction Cost (unescalated cost in 2013 dollars)		-	$11,616,162
Construction Mgmt. (12% of construction cost)		-	$1,393,939
Subtotal			**$13,010,102**
Total Jepson Parkway Costs			**$210,682,771**

[1] 12% engineering and 10% construction administration.
[2] According to STA, costs for this project are not part of the initial 2009 cost estimates for the Jepson Parkway Project. Cost estimates prepared by HDR and dated May 16, 2013.

Source: Jepson Parkway Project, Project Technical Report, February 2009; Engineering News Record; STA; and Economic & Planning Systems.

2. Peabody Road

The civil engineering firm Carlson, Barbee & Gibson, Inc. provided an initial estimate for the widening of Peabody Rd. from two (2) to four (4) lanes from New Canon Rd. to the Fairfield City limits, as part of the Northeast Fairfield Train Station Specific Plan. This detailed estimate conducted on May, 2012 generated a project cost of $4.9 million (see **Exhibit B**). Subsequently, in May 2013 the City of Fairfield updated this cost estimate to $5 million, as documented in a May 2013 letter to the STA (see attached **Exhibit C**). This updated project cost estimate is used in the RTIF nexus analysis.

3. State Route 12/Pennsylvania Avenue

The cost estimate for the SR 12 / Pennsylvania Ave. intersection is based on information provided by Mark Thomas & Company, Inc., a civil engineering firm retained by STA. The estimate covers the full cost associated with replacing the existing SR 12/Pennsylvania at-grade intersection with a new grade-separated interchange. The $50 million estimate incorporates a set of relatively generic cost assumptions for a new interchange of this size and scope. The estimates were also informed by the 2008 Contra Costa Transportation Authority (CCTA) Cost Estimating Guide (CEG).

4. State Route 12/Church Road

The State Route 12 (SR-12)/Church Road project in Rio Vista involves the re-alignment of either Church Road or Amerada Road to eliminate the offset between Church Road and Amerada Road intersections on SR 12, addition of acceleration/deceleration lanes along SR-12, and addition of left turn lanes along the four intersection approaches. The Project cost was originally estimated at $7.5 million (excluding the 5 percent escalation) based on cost estimates in the Project Study Report prepared by Caltrans in December 2009.[3] For the RTIF Nexus Study these costs were updated to 2013 dollars as shown in **Table A-4**. Including environmental mitigation, the Project's total cost is estimated at approximately $8.9 million (in 2013 dollars).

Table A-4 SR 12/Church Road Revised Project Cost Estimate (2013 dollars)

Cost Item	Engineer's Cost Estimate (2009$)	Cost Escalator	Revised Cost Estimate (2013$)
Right-of-Way	$2,063,368	0.00%	$2,063,368
Construction	$4,001,038	6.58%	$4,264,227
5% construction cost escalation	$1,105,413		n/a
Environmental Mitigation[1]	$0	-	$985,000
Support[2]	$1,485,000	-	$1,579,394
Total	**$8,654,819**		**$8,891,989**

[1] Based on STA estimate.

[2] Revised support costs calculated at the ratio of original support costs to construction and ROW costs.

Source: Project Study Report, June 2010; Engineering News Record; and Economic & Planning Systems.

5. State Route 37/Redwood Parkway/Fairgrounds Drive

The STA, Solano County, and the City of Vallejo, in cooperation with Caltrans and the Federal Highway Administration (FHWA), propose to construct high occupancy vehicle (HOV) lanes on westbound and eastbound I-80 between the Alfred Zampa (formerly Carquinez) Bridge and State Route 37. The project would add approximately ten (10) lane miles of HOV lanes to the I-80 corridor and consolidate access points within the project limits via ramp closures. The project costs included in the RTIF program reflect Alternative 2C-Redwood Parkway Interchange Modifications, as described in the CALTRANS Project Study Report (PSR), completed in December, 2008.[4] The costs exclude construction of the HOV lane itself, but include the following elements, as described in the PSR (page 21).

[3] The report can be downloaded at: http://www.sta.ca.gov/docManager/1000002498/100622%20EA%2004-0G050k%20Final%20PSR_signed.pdf

[4] See: http://www.sta.ca.gov/docManager/1000002418/Project%20Study%20Report%20and%20Signatures%20pages%201-33-web.pdf)

- Construction of a tight diamond at I-80/Redwood Parkway Interchange
- Widening of Fairgrounds Drive from two to four lanes from Redwood Street to Coach Lane, and from four to six lanes from Coach Lane to Route 37.
- Signalized intersections at the Redwood Parkway/I-80 eastbound ramps, Redwood Road/I-80 WB ramps, and Redwood Road/Fairgrounds Drive
- Signalized intersections at Fairgrounds Drive/Solano County Fairgrounds Development Entrance (south), and Fairgrounds Drive/Nalle Vista Avenue
- Signal modifications at Fairgrounds Drive/Route 37 WB ramps, Fairgrounds Drive/Route 37 eastbound ramps, Fairgrounds Drive/Solano County Fairgrounds Development Entrance (north), Sereno Drive/Fairground Drive, and Redwood Road/Admiral Callaghan Way
- Relocation of the Fairgrounds Drive/Redwood Road intersection
- Cul-de-sac at Moorland Street west of Fairgrounds Drive

For the purposes of the RTIF the 2008 cost estimate of between $60 and $65 million is assumed to be $62.5 million. This cost has been escalated to 2013 dollars based on ENR escalation factors (see **Table A-2**), resulting in a total cost estimate of $66,410,000.

6. Benicia Industrial Park Access

A preliminary engineer's opinion of probable cost was prepared in August 2013 by Omni-Means, and is included here as **Exhibit D**. It estimates the Project's cost at approximately $20.2 million. The total cost includes right-of-way, utilities, roadway construction, environmental mitigation, contingency and support items.

7. Columbus Parkway Improvements

The Columbus Parkway improvements consist of an extension and widening of the westbound right hand turn lane commencing approximately 700 feet east of Rose Drive. The cost for this improvement were provided by City of Benicia staff and documented in **Exhibit E.**

8. North Connector (West End)

The West End of the North Connector Project includes a 1-mile portion of roadway between SR 12/Red Top Road intersection and Business Center Drive. Proposed improvements consist of extending Business Center Drive as a two-lane roadway westward to connect with SR 12 at Red Top Road where a four-way signalized intersection would be installed with lane expansions to accommodate through, left- and right-turn movements in all directions. Caltrans prepared a Project Technical Report in April 2008 which estimated the Project cost at $30.4 million (2008 dollars).[5] After adjusting for cost inflation, as shown below, the Project cost is estimated at approximately $33.9 million (in 2013 dollars). As shown, the 2013 cost also includes an environmental mitigation cost of $5.6 million for a total Project cost of $39.5 million.

[5] The report can be downloaded at:
http://www.sta.ca.gov/docManager/1000002605/01%20NC%20Project%20Technical%20Report%20%28042208%29.pdf

Table A-5 North Connector Revised Project Cost Estimate (2013 dollars)

Cost Item	Engineer's Cost Estimate (2008$)	Cost Escalator	Revised Cost Estimate (2013$)
Right-of-Way	$4,100,000	0.00%	$4,100,000
Construction	$21,450,000	13.31%	$24,305,071
Environmental Mitigation[1]	$0	-	$5,555,875
Support[2]	$4,850,000	-	$5,495,552
Total	**$30,400,000**		**$39,456,498**

[1] Mitigation costs for environmental mitigation for biological impacts, based on STA estimate.
[2] Revised support costs calculated at the ratio of original support costs to construction costs.

Source: North Connector Project Technical Report, April 2008; Engineering News Record; and Economic & Planning Systems.

9. State Route 113 Improvements

State Route 113 improvement costs in the RTIF include baseline Transportation System Management (TSM), Traffic Demand Management (TDM), and Intelligent Transportation Management Systems (ITS) enhancements. The enhancements are part of a list of projects proposed under the SR 113 Major Investment and Corridor Study prepared by Kimley-Horn and Associates and Cambridge Systematics for STA in May 2009. These TSM, TDM and ITS projects are intended to provide incentives for carpooling, transit services and construction of Park and Ride facilities. Project costs were estimated at $4.2 million in 2009 dollars. For the RTIF, costs were escalated to $4.5 million (in 2013 dollars) as shown in **Table A-6** below.

Table A-6 SR 113 TSM, TDM, and ITS Projects Revised Cost Estimate (2013 dollars)

Cost Item	Engineer's Cost Estimate (2009$)	Cost Escalator	Revised Cost Estimate (2013$)
Right-of-Way	$0	0.00%	$0
Construction	$3,240,000	6.26%	$3,442,688
Support[1]	$970,000	-	$1,032,806
Total	**$4,210,000**		**$4,475,494**

[1] Support costs calculated at 30% of construction costs.

Source: State Route 113 Major Investment Study, May 2009 prepared by Kimley-Horn and Associates; Engineering News Record; and Economic & Planning Systems.

10. County Road Projects

The RTIF program has been designed to allocate approximately 5 percent of all fee revenue to County road projects over the life of the program. The cost estimates are based on revenue projections assuming an RTIF of $1,500 per DUE. Specifically, the RTIF forecast of 28,259 new DUEs in the County through 2033 multiplied by $75 per DUE (5 percent of $1,500) equals approximately $2.2 million in revenue for County road projects.

As shown in **Table A-7**, the RTIF revenue of $2.1 million generated from 2013 to 2033 equates to a total cost estimate for eligible RTIF County road projects of $12.4 million. This is because the nexus allocates approximately 17 percent of these costs to the RTIF, or $2.1 million, based on a proportional fair share allocation of County-wide DUE growth relative to existing DUEs. In other words, the RTIF forecast of 28,259 new DUEs in the County through 2033 represents a 17 percent increase over the existing DUEs.

Table A-7 RTIF Cost Allocation to County Road and Transit Projects

Item	Source	Formula	Amount
Total Projected DUE Growth	Table 6	a	28,259
Potential RTIF Total Revenue			
Recommended RTIF Per DUE		b	$1,500
Total RTIF Revenue		c = a * b	**$42,388,739**
5% of Total RTIF Revenue		d = c * 5%	$2,119,437
Project Cost Allocation to RTIF		e = d	**$2,119,437**
RTIF Allocated Cost as a % of Total Eligible Cost	Table 6	f	17%
Total Eligible Project Cost		g = e / f	**$12,435,181**

It should be noted that the County has developed a list of County road projects that will be eligible for the 5 percent RTIF revenue allocation assumed for the RTIF program. **Table A-8** provides further documentation of the eligible facilities and corresponding preliminary cost estimates for the County road projects (Item #10 from **Table A-1**). As shown, the combined cost of these County road projects is $99 million, significantly above the $12.4 million estimate used to calculate the maximum nexus in the RTIF.

Again, it is important to note that the maximum RTIF fee is not derived based on this project list or corresponding costs. Rather it is calculated based on 5 percent of total RTIF revenue. This list of eligible facilities and cost estimates is provided for information purposes only. However, given that the capital cost associated with the identified list of eligible RTIF County road projects significantly exceeds the cost estimate assumed in the RTIF Nexus Reports, the methodology is highly conservative.

Table A-8 County Road Projects

Road Name	Begin Location	End Location	Cost to Upgrade[1]
ABERNATHY ROAD	Suisun Parkway	Mankas Corner Road	$5,380,000
AZEVEDO ROAD	SR 12	Canright Road	$1,380,000
CANRIGHT ROAD	McCormack Road	0.5 mi e/Azevedo Road	$430,000
CHERRY GLEN ROAD	I-80 at Lyon Road	Vacaville c/l (at I-80)	$5,740,000
CORDELIA ROAD	I-680	Suisun City c/l	$7,700,000
FOOTHILL ROAD	Vacaville c/l	Pleasants Valley Road	$450,000
LAKE HERMAN ROAD	Vallejo c/l	Benicia c/l	$1,210,000
LOPES ROAD	Fairfield c/l	Lake Herman Road	$19,090,000
LYON ROAD	Fairfield c/l	Cherry Glen Road	$6,930,000
MANKAS CORNER ROAD	Abernathy Road	Fairfield c/l	$2,920,000
McCLOSKEY ROAD	SR 12	McCormack Road	$430,000
McCORMACK ROAD	SR 113	Rio Vista c/l	$5,330,000
MIDWAY ROAD	I-80 at Vacaville c/l	SR 113	$9,490,000
PEDRICK ROAD	Midway Road	Yolo County Line	$14,830,000
PITT SCHOOL ROAD	Midway Road	Dixon c/l	$580,000
PLEASANTS VALLEY ROAD	Cherry Glen Road	Vaca Valley Road	$1,280,000
PORTER ROAD	Midway Road	Dixon c/l	$665,000
ROCKVILLE ROAD	I-80	Suisun Valley Road	$11,430,000
SUISUN VALLEY ROAD	Fairfield c/l	Rockville Road	$3,330,000
VACA VALLEY ROAD	Pleasants Valley Road	Vacaville c/l	$455,000
TOTAL			**$99,050,000**

[1] Based on data provided by Solano County Public Works.

11. Express Bus Transit Centers and Train Stations

The cost estimates for RTIF eligible transit projects assumed in the RTIF Report were developed in a fashion similar to those for the County Road projects. Again, it was assumed that County Transit projects will receive approximately 5 percent of RTIF revenue over the life of the program, or about $75 per DUE which equates to $2.2 million. The RTIF revenue of $2.2 million generated from 2013 to 2033 equates to a total cost estimate for eligible RTIF transit projects of $12.4 million (see **Table A-7**).

The STA in consultation with the Solano County Transit Operators and other stakeholders has developed an eligibility list of County Transit projects that will be eligible for the 5 percent RTIF revenue allocation (referred to as Express Bus Transit Centers and Train Stations projects). The list of eligible transit projects and preliminary cost estimates are summarized in **Table A-9** based on information assembled by the STA. As shown, the combined cost of these County transit projects is $94.7 million, significantly above the $12.4 million estimate used to calculate the maximum nexus in the RTIF.

As noted in the body of this Report, the list of eligible Express Bus Transit Centers and Train Stations projects have been updated since the July Report as follows:

1. The Fairfield /Vacaville Train Station, next phase project has been added to the list. This project, although approved by STA Board on May 8, 2013, was inadvertently excluded from the list of eligible projects for Express Bus Transit Centers and Train Stations expenditures on Table 7 of the STA RTIF Nexus Report.
2. The Vallejo Station or Curtola Park & Ride, next phase project has been separated into two discrete projects. These two projects were combined into one project in the STA RTIF Nexus Report.

Again, it is important to note that the maximum RTIF fee is not derived based on this project list or corresponding costs. Rather it is calculated based on 5 percent of total RTIF revenue. This list of eligible facilities and cost estimates is provided for information purposes only. However, given that the capital cost associated with the identified list of eligible RTIF County road projects significantly exceeds the cost estimate assumed in the RTIF Report, the methodology is highly conservative.

Table A-9 Eligible RTIF Transit Projects

Project Name	Cost Estimate[1]
Benicia Industrial Park Multi-modal Transit Center	$1,800,000
Dixon Multimodal Transportation Center	$27,800,000
Fairfield Transportation Center, next phase	$25,000,000
Fairfield/Vacaville Train Station, next phase[2]	$8,609,720
360 Project Area Transit Center	$295,640
Vallejo Station, next phase	$10,000,000
Curtola Park & Ride, next phase	$10,000,000
Vacaville Transportation Center, next phase	$10,500,000
Suisun City Train Station improvements	$650,000
Total	**$94,655,360**

[1] Cost estimates provided by STA based on a variety of sources. Costs are for information purposes only and not used to calculate the maximum RTIF.
[2] Reflects net cost (i.e., total project costs of $68,975,600 less identified revenues of $60,365,880).

EXHIBIT A

SECTION	PRICE	UNIT	SEGMENT 1		2		3		4		5		6		7		8		9		10		11		12		13		14		15		16		Project Total
			Units	Cost Ext	Units	Cost Ext	Units	Cost Ext	Units	Cost Ext	Units	Cost Ext	Units	Cost Ext	Units	Cost Ext	Units	Cost Ext	Units	Cost Ext	Units	Cost Ext	Units	Cost Ext	Units	Cost Ext	Units	Cost Ext	Units	Cost Ext	Units	Cost Ext	Units	Cost Ext	Total Cost
I. ROADWAY ITEMS																																			
Section 1 - Roadway Items																																			
Roadway Excavation	CY	$15	100	$1,500	10000	$150,000	20000	$300,000	46000	$690,000	5000	$75,000	20000	$300,000	110300	$1,654,500	6500	$97,500	35000	$525,000	25000	$375,000	5000	$75,000	30000	$450,000	50000	$750,000	48000	$720,000	18000	$270,000	20000	$300,000	$6,733,500
Imported Borrow	CY	$20		$0		$0	92000	$1,840,000		$0		$0		$0		$0		$0		$0		$0		$0		$0		$0		$0		$0		$0	$1,840,000
Clearing & Grubbing	Acre	$10,000	0.1	$1,000	4.6	$46,000	10.4	$104,000	10.5	$105,000	0.6	$6,000	4.1	$41,000	29	$290,000	1.4	$14,000	9.5	$95,000	8.5	$85,000	1.2	$12,000	10	$100,000	1.5	$15,000	6.4	$64,000	4.1	$41,000	4.1	$41,000	$1,060,000
Muck Excavation & Stabilization	CY	$35		$0		$0	8300	$290,500		$0		$0		$0		$0		$0		$0		$0		$0		$0		$0		$0		$0		$0	$290,500
SUBTOTAL				**$2,500**		**$196,000**		**$2,534,500**		**$795,000**		**$81,000**		**$341,000**		**$1,944,500**		**$111,500**		**$620,000**		**$460,000**		**$87,000**		**$550,000**		**$765,000**		**$784,000**		**$311,000**		**$341,000**	**$9,924,000**
Section 2 - Pavement Structural Section																																			
Asphalt Concrete Pavement	TON	$85	100	$8,500	5400	$459,000	12000	$1,020,000	12500	$1,062,500	1250	$106,250	4750	$403,750	28480	$2,420,800	2300	$195,500	8200	$697,000	6700	$569,500	1900	$161,500	11400	$969,000	3200	$272,000	11000	$935,000	6300	$535,500	20600	$1,751,000	$11,566,800
Aggregate Base Course	CY	$25	200	$5,000	10400	$260,000	23700	$592,500	24800	$620,000	2000	$50,000	8800	$220,000	57600	$1,440,000	4500	$112,500	10300	$257,500	9900	$247,500	3800	$95,000	22900	$572,500	6500	$162,500	21300	$532,500	12000	$300,000	13900	$347,500	$5,815,000
Curb & Gutter - Fairfield	LF	$25		$0	2200	$55,000	10300	$257,500	8900	$222,500	2700	$67,500	4700	$117,500		$0		$0		$0		$0		$0		$0		$0		$0		$0		$0	$720,000
Curb & Gutter - Vacaville	LF	$25		$0		$0		$0		$0		$0		$0	1200	$30,000	1300	$32,500	8400	$210,000	5500	$137,500	1200	$30,000	9420	$235,500	2150	$53,750	31400	$785,000	30800	$770,000	25600	$640,000	$2,924,250
Median Curb - Fairfield	LF	$20	1400	$28,000	4200	$84,000	2200	$44,000	9100	$182,000	2300	$46,000	4700	$94,000		$0		$0		$0		$0		$0		$0		$0		$0		$0		$0	$478,000
Median Curb - Vacaville	LF	$20		$0		$0		$0		$0		$0		$0	1400	$28,000	1600	$32,000	8400	$168,000	8000	$160,000	1000	$20,000	8600	$172,000	1400	$28,000	9000	$180,000	6200	$124,000	8100	$162,000	$1,074,000
Median Curb - Special	LF	$25		$0		$0	9730	$243,250		$0		$0		$0		$0		$0		$0		$0		$0		$0		$0		$0		$0		$0	$243,250
Concrete Sidewalk	SY	$50	1300	$65,000	2400	$120,000	5500	$275,000	7200	$360,000	2400	$120,000	2600	$130,000	12200	$610,000	400	$20,000	4500	$225,000	1800	$90,000	500	$25,000	4900	$245,000	800	$40,000	2900	$145,000	200	$10,000	50	$2,500	$2,482,500
SUBTOTAL				**$106,500**		**$978,000**		**$2,432,250**		**$2,447,000**		**$389,750**		**$965,250**		**$4,528,800**		**$392,500**		**$1,557,500**		**$1,204,500**		**$331,500**		**$2,194,000**		**$556,250**		**$2,577,500**		**$1,739,500**		**$2,903,000**	**$25,303,800**
Section 3 - Drainage Items																																			
Pipes <= 36"	LF	$150		$0	2600	$390,000	3200	$480,000	2800	$420,000	30	$4,500	400	$60,000	600	$90,000	200	$30,000	1600	$240,000	1100	$165,000	600	$90,000	3900	$585,000	260	$39,000	3800	$570,000	1800	$270,000	1100	$165,000	$3,598,500
Pipes > 36"	LF	$300		$0	80	$24,000	0	$0	1400	$420,000		$0		$0		$0	0	$0		$0	2100	$630,000	0	$0	1000	$300,000	1100	$330,000	1600	$480,000	50	$15,000	0	$0	$2,199,000
Drop Inlets	EA	$5,000		$0	13	$65,000	34	$170,000	22	$110,000	8	$40,000	10	$50,000	8	$40,000	4	$20,000	16	$80,000	18	$90,000	2	$10,000	28	$140,000	8	$40,000	30	$150,000	8	$40,000	10	$50,000	$1,095,000
Storm Drainage Manholes	EA	$8,000		$0	5	$40,000	6	$48,000		$0		$0	4	$32,000	2	$16,000	2	$16,000	8	$64,000	12	$96,000	2	$16,000	8	$64,000	4	$32,000	10	$80,000	4	$32,000	6	$48,000	$584,000
Misc. Storm Drainage Structures	LS	Varies		$0		$5,000		$15,000		$20,000		$0		$0		$20,000		$5,000		$10,000		$10,000		$5,000		$10,000		$40,000		$10,000		$5,000		$10,000	$165,000
Permanent BMPs	LS	Varies		$0		$30,000		$100,000		$80,000		$30,000		$30,000		$60,000		$0		$0		$30,000		$0		$20,000		$100,000		$50,000		$50,000		$0	$580,000
SUBTOTAL				**$0**		**$554,000**		**$813,000**		**$1,050,000**		**$74,500**		**$172,000**		**$226,000**		**$71,000**		**$394,000**		**$1,021,000**		**$121,000**		**$1,119,000**		**$581,000**		**$1,340,000**		**$412,000**		**$273,000**	**$8,221,500**
Section 4 - Specialty Items																																			
Patterned Concrete Median	SF	$15	3440	$51,600	8900	$133,500	5500	$82,500	18000	$270,000	4500	$67,500	8000	$120,000	3000	$45,000	5300	$79,500	16800	$252,000	15000	$225,000	2100	$31,500	18100	$271,500	3000	$45,000	19400	$291,000	12600	$189,000	14800	$222,000	$2,376,600
Landscape Median - Urban	SF	$5	1200	$6,000	10200	$51,000	1300	$6,500	36200	$181,000	6000	$30,000	25000	$125,000		$0	1700	$8,500	40200	$201,000	30800	$154,000	400	$2,000	33300	$166,500	2100	$10,500	31500	$157,500	30800	$154,000	20000	$100,000	$1,353,500
Landscape Median - Rural	SF	$2		$0		$0		$0		$0		$0		$0	155000	$310,000		$0		$0		$0		$0		$0		$0		$0		$0		$0	$310,000
Landscape Roadside - Urban	SF	$4		$0		$0		$0	10000	$40,000	1500	$6,000	20000	$80,000		$0		$0	160000	$640,000	*1000000*	$400,000	12000	$48,000	100000	$400,000	150000	$600,000	110000	$440,000	0	$0	0	$0	$2,654,000
Landscape Roadside - Rural	SF	$1		$0		$0		$0		$0		$0		$0	200000	$200,000	8000	$8,000		$0		$0		$0		$0		$0		$0		$0		$0	$208,000
SID Irrigation Channel Relocations	LF	$300		$0		$0		$0	100	$30,000		$0		$0	300	$90,000	100	$30,000	100	$30,000		$0		$0	1000	$300,000		$0	3400	$1,020,000	100	$30,000	500	$150,000	$1,680,000
Water and Sanitary Relocations	LS	Varies		$0		$5,000		$5,000		$10,000		$5,000		$5,000		$0		$0		$0		$5,000		$25,000		$5,000		$20,000		$10,000		$40,000		$40,000	$175,000
Construction BMPs	LS	Varies		$0		$50,000		$150,000		$80,000		$10,000		$30,000		$110,000		$10,000		$50,000		$50,000		$10,000		$80,000		$45,000		$100,000		$45,000		$60,000	$880,000
Biological Mitigations	LS	Varies	0	$0	1	$3,613,000	1	$5,983,750	1	$151,000	0	$0	1	$1,519,250	1	$10,000	0	$0	0	$0	0	$0	0	$0	0	$0	1	$78,000	0	$0	0	$0	1	$6,500	$11,361,500
Hazardous Materials Mitigations	LS	Varies		$0		$143,000		$0		$100,000		$0		$0		$0		$0		$0		$0		$0		$0		$0		$0		$0		$0	$243,000
Noise (Soundwall) Mitigations	SF	$45		$0		$0		$0		$0		$0		$0		$0		$0		$0		$0		$0	11900	$535,500	2500	$112,500		$0		$0	8400	$378,000	$1,026,000
SUBTOTAL				**$57,600**		**$3,995,500**		**$6,227,750**		**$862,000**		**$118,500**		**$1,879,250**		**$765,000**		**$136,000**		**$1,173,000**		**$834,000**		**$116,500**		**$1,758,500**		**$911,000**		**$2,018,500**		**$458,000**		**$956,500**	**$22,267,600**
Section 5 - Traffic Items																																			
Signalized Intersection	LS	$250,000		$0	1	$250,000	1	$250,000	1	$250,000	1	$250,000		$0	1.5	$375,000	1	$250,000		$0		$0	1	$250,000	1	$250,000	1	$250,000		$0		$0		$0	$2,375,000
Interconnect Conduit	LF	$20		$0	6000	$120,000	5000	$100,000	1300	$26,000	2350	$47,000		$0		$0		$0	4100	$82,000	3800	$76,000	500	$10,000	4400	$88,000	800	$16,000	4700	$94,000	3100	$62,000	3600	$72,000	$793,000
Street Lighting	LF	$80	0	$0	2400	$192,000	5700	$456,000	4600	$368,000	100	$8,000	2000	$160,000	1000	$80,000	600	$48,000	4000	$320,000	3600	$288,000	400	$32,000	4300	$344,000	600	$48,000	4600	$368,000	3000	$240,000	3000	$240,000	$3,192,000
Stage Construction/Traffic Control	Mile	$60,000	0.1	$6,000	0.5	$30,000	0.4	$24,000	0.9	$54,000	0.3	$18,000	0.5	$30,000	2	$120,000	0.2	$12,000	0.8	$48,000	0.7	$42,000	0.1	$6,000	0.8	$48,000	0.2	$12,000	0.9	$54,000	0.6	$36,000	0.7	$42,000	$582,000
Signing & Pavement Marking	Mile	$30,000		$0	0.5	$15,000	1.2	$36,000	0.9	$27,000	0.3	$9,000	0.5	$15,000	2	$60,000	0.2	$6,000	0.8	$24,000	0.7	$21,000	0.1	$3,000	0.8	$24,000	0.2	$6,000	0.9	$27,000	0.6	$18,000	0.7	$21,000	$312,000
SUBTOTAL				**$6,000**		**$607,000**		**$866,000**		**$725,000**		**$332,000**		**$205,000**		**$635,000**		**$316,000**		**$474,000**		**$427,000**		**$301,000**		**$754,000**		**$332,000**		**$543,000**		**$356,000**		**$375,000**	**$7,254,000**
Section 6 - Minor Items																																			
5% of Sections 1 to 5	LS	Varies		$8,630		$316,525		$643,675		$293,950		$49,788		$178,125		$404,965		$51,350		$210,925		$197,325		$47,850		$318,775		$157,263		$363,150		$163,825		$242,425	$3,648,545
SUBTOTAL				**$8,630**		**$316,525**		**$643,675**		**$293,950**		**$49,788**		**$178,125**		**$404,965**		**$51,350**		**$210,925**		**$197,325**		**$47,850**		**$318,775**		**$157,263**		**$363,150**		**$163,825**		**$242,425**	**$3,648,545**
Section 7 - Roadway Mobilization																																			
10% of Sections 1 to 6	LS	Varies		$18,123		$664,703		$1,351,718		$617,295		$104,554		$374,063		$850,427		$107,835		$442,943		$414,383		$100,485		$669,428		$330,251		$762,615		$344,033		$509,093	$7,661,945
SUBTOTAL				**$18,123**		**$664,703**		**$1,351,718**		**$617,295**		**$104,554**		**$374,063**		**$850,427**		**$107,835**		**$442,943**		**$414,383**		**$100,485**		**$669,428**		**$330,251**		**$762,615**		**$344,033**		**$509,093**	**$7,661,945**
Section 8 - Roadway Additions																																			
Contingency (20% of Sections 1-7)	LS	Varies		$39,871		$1,462,346		$2,973,779		$1,358,049		$230,018		$822,938		$1,870,938		$237,237		$974,474		$911,642		$221,067		$1,472,741		$726,553		$1,677,753		$756,872		$1,120,004	$16,856,278
SUBTOTAL				**$39,871**		**$1,462,346**		**$2,973,779**		**$1,358,049**		**$230,018**		**$822,938**		**$1,870,938**		**$237,237**		**$974,474**		**$911,642**		**$221,067**		**$1,472,741**		**$726,553**		**$1,677,753**		**$756,872**		**$1,120,004**	**$16,856,278**
Subtotal Roadway Items			*$239,224*		*$8,774,073*		*$17,842,671*		*$8,149,294*		*$1,380,110*		*$4,937,625*		*$11,225,630*		*$1,423,422*		*$5,846,841*		*$5,469,849*		*$1,326,402*		*$8,836,443*		*$4,359,317*		*$10,066,518*		*$4,541,229*		*$6,720,021*		*$101,137,667*
II. STRUCTURES ITEMS																																			
Structures Items																																			
Retaining Walls	SF	$50		$0		$0	77500	$3,875,000		$0		$0		$0		$0		$0		$0		$0		$0		$0		$0		$0		$0		$0		$0	$3,875,000
Union Pacific Railroad OC	SF	$350		$0		$0	21700	$7,595,000		$0		$0		$0		$0		$0		$0		$0		$0		$0		$0		$0		$0		$0		$0	$7,595,000
McCoy Tributary Drainage Crossing	SF	$200		$0		$0	9800	$1,960,000		$0		$0		$0		$0		$0		$0		$0		$0		$0		$0		$0		$0		$0		$0	$1,960,000
Strassburger Detention Pond Crossing	SF	$230		$0		$0	105000	$24,150,000		$0		$0		$0		$0		$0		$0		$0		$0		$0		$0		$0		$0		$0		$0	$24,150,000
Union Creek Crossing	SF	$175		$0		$0		$0		$0		$0		$0	11880	$2,079,000		$0		$0		$0		$0		$0		$0		$0		$0		$0		$0	$2,079,000
New Alamo Creek Crossing Widening	SF	$175		$0		$0		$0		$0		$0		$0		$0		$0		$0	5600	$980,000		$0		$0		$0		$0		$0		$0		$0	$980,000
SUBTOTAL				**$0**		**$0**		**$37,580,000**		**$0**		**$0**		**$0**		**$2,079,000**		**$0**		**$0**		**$980,000**		**$0**		**$0**		**$0**		**$0**		**$0**		**$0**	**$40,639,000**
III. RIGHT OF WAY AND UTILITY ITEMS																																			
Right of Way Items																																			
Relocations & Permanent Acquisitions	LS	Varies		$10,000		$50,000		$780,000		$300,000		$34,500		$3,800,000		$750,000		$65,000		$1,700,000		$425,000		$5,000		$720,000		$150,000		$365,000		$13,000		$1,500,000	$10,667,500
Temporary Easements	LS	Varies		$0		$5,000		$12,000		$10,000		$3,000		$2,500		$22,000		$2,000		$8,000		$7,500		$1,000		$9,000		$2,000		$9,000		$6,000		$7,500	$106,500
SUBTOTAL				**$10,000**		**$55,000**		**$792,000**		**$310,000**		**$37,500**		**$3,802,500**		**$772,000**		**$67,000**		**$1,708,000**		**$432,500**		**$6,000**		**$729,000**		**$152,000**		**$374,000**		**$19,000**		**$1,507,500**	**$10,774,000**
Utility Items																																			
Underground PG&E Electric Lines	Mile	$350,000		$0		$0	0.5	$175,000	0.9	$315,000		$0	0.45	$157,500	2.1	$735,000	0.2	$70,000		$0	0.7	$245,000	0.1	$35,000	0.85	$297,500	0.15	$52,500	0.9	$315,000	0.5	$175,000	0.5	$175,000	$2,747,500
Relocate Kinder Morgan Check Valve	LS	Varies		$0		$0		$0		$0		$0		$0		$100,000		$0		$0		$0		$0		$0		$0		$0		$0		$0		$0	$100,000
Relocate North Bay Aqueduct Valves	LS	Varies		$0		$0		$0		$80,000		$0		$0		$0		$0		$0		$0		$0		$0		$0		$0		$0		$0		$0	$80,000
SUBTOTAL				**$0**		**$0**		**$175,000**		**$395,000**		**$0**		**$157,500**		**$835,000**		**$70,000**		**$0**		**$245,000**		**$35,000**		**$297,500**		**$52,500**		**$315,000**		**$175,000**		**$175,000**	**$2,927,500**
Subtotal Capital Costs			*$249,224*		*$8,829,073*		*$56,389,671*		*$8,853,294*		*$1,417,610*		*$8,897,625*		*$14,911,630*		*$1,560,422*		*$7,554,841*		*$7,127,349*		*$1,367,402*		*$9,862,943*		*$4,563,897*		*$10,755,518*		*$4,735,229*		*$8,402,521*		*$155,478,167*
IV. SUPPORT ITEMS																																			
Administration Costs																																			
Engineering (12% of Items I - II)	LS	Varies		$28,707		$1,052,889		$6,650,721		$977,795		$165,613		$592,515		$1,596,556		$170,811		$701,621		$773,982		$159,168		$1,060,373		$523,118		$1,207,982		$544,947		$896,403	$17,013,200
Construction Admin. (10% of Items I - II)	LS	Varies		$23,922		$877,407		$5,542,267		$814,829		$138,011		$493,763		$1,330,463		$142,342		$584,684		$644,985		$132,640		$883,644		$435,932		$1,006,652		$454,123		$672,002	$14,177,667
SUBTOTAL				**$52,629**		**$1,930,296**		**$12,192,988**		**$1,792,625**		**$303,624**		**$1,086,278**		**$2,927,019**		**$313,153**		**$1,286,305**		**$1,418,967**		**$291,808**		**$1,944,017**		**$959,050**		**$2,214,634**		**$999,070**		**$1,478,405**	**$31,190,867**
TOTAL			**$301,853**		**$10,759,369**		**$68,582,659**		**$10,645,919**		**$1,721,234**		**$9,983,903**		**$17,838,648**		**$1,873,575**		**$8,841,146**		**$8,546,316**		**$1,659,210**		**$11,806,960**		**$5,522,866**		**$12,970,152**		**$5,734,299**		**$9,880,926**		**$186,669,034**

EXHIBIT B

Carlson, Barbee & Gibson, Inc.
CIVIL ENGINEERS • SURVEYORS • PLANNERS

ENGINEER'S PRELIMINARY COST ESTIMATE
PEABODY ROAD
NEW CANON ROAD TO CITY LIMITS
BACKBONE TRANSPORTATION INFRASTRUCTURE FOR
NORTHEAST FAIRFIELD TRAIN STATION SPECIFIC PLAN AREA
FAIRFIELD, CALIFORNIA

May 30, 2012
Job No.: 1668-000

Item	Description	Quantity	Unit	Unit Price	Amount
2,580	**LF**				
116	**Right of Way Width - 4 Lanes**				
34	**Curb to Curb Width**				
15	**Median Landscaping Area**				
0	**Landscaping Area**				

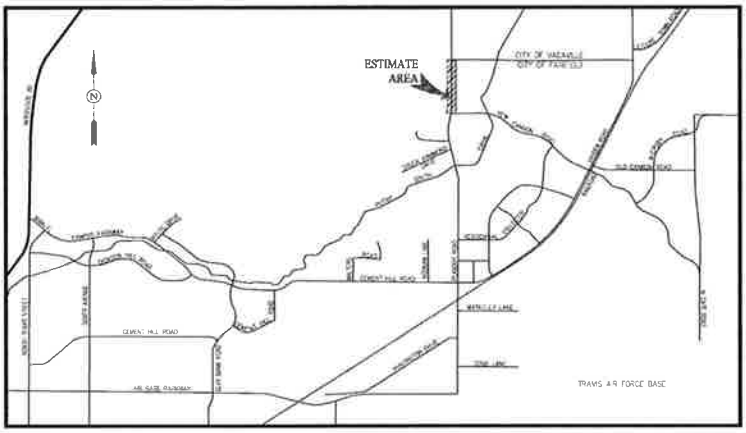

Northeast Fairfield Vicinity Map

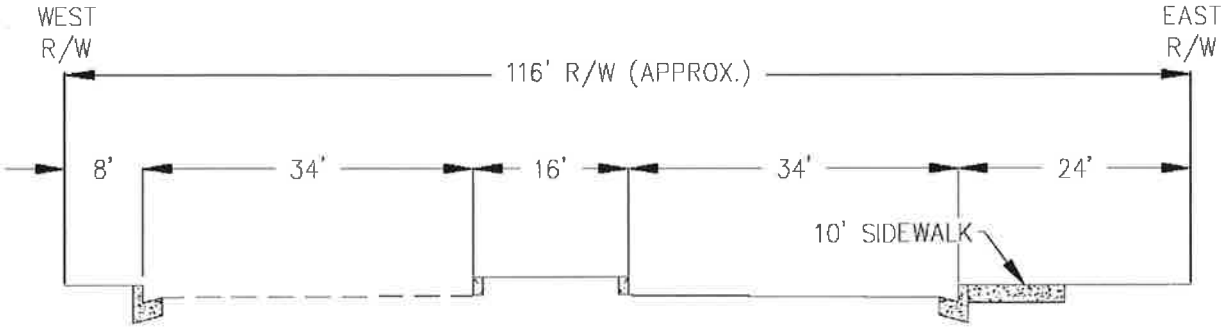

NEW CANON ROAD TO CITY LIMIT

Item	Description	Quantity	Unit		Unit Price		Amount
	STREET IMPROVEMENTS						
1	Mobilization	2,580	LF	$	25.00	$	64,500.00
2	Clearing and Grubbing *(82' x 2,580')*	211,560	SF	$	0.20	$	42,312.00
3	Roadway Earthwork	0	CY	$	10.00	$	-
4	Export *(Truck & Off Haul) (34' x 2,580' x 3' deep/27)*	9,800	CY	$	20.00	$	196,000.00
5	Finish Grading to Right of Way *(82' x 2,580')*	211,560	SF	$	0.40	$	84,624.00
6	Subgrade Fabric *(34' x 2,580')*	87,720	SF	$	0.15	$	13,158.00
7	7" Asphalt Concrete *(32' x 2,580')*	82,560	SF	$	3.15	$	260,064.00
8	25.5" Aggregate Base *(32' x 2,580')*	82,560	SF	$	3.83	$	315,792.00
9	Curb and Gutter	5,160	LF	$	18.00	$	92,880.00
10	Median Curb and Gutter	5,160	LF	$	18.00	$	92,880.00
11	Sidewalk *(10' East Side)*	25,800	SF	$	5.50	$	141,900.00
12	Handicap Ramps	0	EA	$	1,500.00	$	-
13	Signing and Striping *(4 or 6 lane roadways)*	2,580	LF	$	20.00	$	51,600.00
14	Signing and Striping *(2 lane roadways)*	0	LF	$	15.00	$	-
15	Temporary Signing and Striping	0	LF	$	10.00	$	-
16	Traffic Control *(Major)*	0	LF	$	40.00	$	-
17	Traffic Control *(Standard)*	2,580	LF	$	20.00	$	51,600.00
18	Traffic Control *(Minor)*	0	LF	$	10.00	$	-
19	Erosion Control	2,580	LF	$	10.00	$	25,800.00
	Subtotal Street Improvements					$	1,433,110.00
	ADDITIONAL STREET IMPROVEMENTS						
20	Sawcut Existing Pavement	2,580	LF	$	4.00	$	10,320.00
21	2" AC Overlay *(32' x 2,580')*	82,560	SF	$	1.00	$	82,560.00
22	Remove Existing Pavement *(8' x 2,580')*	20,640	SF	$	1.00	$	20,640.00
23	Additional Road Grading *(Due to topography)*	1	LS	$	100,000.00	$	100,000.00
24	Relocate Existing Fiber Optic Line	2,580	LF	$	100.00	$	258,000.00
	Subtotal Additional Street Improvements					$	471,520.00
	STORM DRAINAGE						
25	18"-30" Storm Drain Pipe	2,580	LF	$	60.00	$	154,800.00
26	18" Storm Drain Crossing *(Every 300')*	722	LF	$	40.00	$	28,896.00
27	Catch Basins/Manholes *(2 Every 300')*	18	EA	$	4,000.00	$	72,000.00
28	Extend Existing Drainage Culvert	1	LS	$	50,000.00	$	50,000.00
29	Connect to Existing Creek	1	EA	$	25,000.00	$	25,000.00
	Subtotal Storm Drainage					$	330,696.00
	SANITARY SEWER						
30	No Items of Work			$	-	$	-
	Subtotal Sanitary Sewer					$	-

Item	Description	Quantity	Unit		Unit Price		Amount
	POTABLE WATER						
31	No Items of Work			$	-	$	-
	Subtotal Potable Water					$	-
	ELECTRICAL						
32	Street Lights *(2 Every 150' Both Sides)*	36	EA	$	4,000.00	$	144,000.00
33	Street Light Trench	2,580	LF	$	20.00	$	51,600.00
34	Underground Existing Overhead Electric	2,580	LF	$	175.00	$	451,500.00
35	Relocate Existing Overhead Poles		EA	$	15,000.00		FRANCHISE
	Subtotal Electrical					$	647,100.00
	MISCELLANEOUS						
36	Landscaping and Irrigation	0	SF	$	5.00	$	-
37	Median Landscaping and Irrigation	38,700	SF	$	5.00	$	193,500.00
	Subtotal Miscellaneous					$	193,500.00
	SUBTOTAL NEW CANON ROAD TO CITY LIMITS COST					**$**	**3,075,926.00**
	CONTINGENCY *(15%)*					**$**	**461,388.90**
	ENGINEERING, PLAN CHECK, ETC. *(15%)*					**$**	**461,388.90**
	RIGHT OF WAY AND MITIGATION						
38	Right of Way Acquisition *(116'-60') (East Side)*	144,480	SF	$	1.34	$	193,603.20
39	Environmental Mitigation *(116'-40')*	196,080	SF	$	3.66	$	717,652.80
	TOTAL NEW CANON ROAD TO CITY LIMITS COST					**$**	**4,910,000.00**
	(to the nearest $1,000)						

EXHIBIT C

CITY OF FAIRFIELD

Founded 1856 | Incorporated December 12, 1903

CITY MANAGER'S OFFICE

COUNCIL
Mayor
Harry T. Price
707.428.7395
Vice-Mayor
Rick Vaccaro
707.429.6298
Councilmembers
707.429.6298
Pam Bertani
Catherine Moy
John Mraz

City Manager
Sean P. Quinn
707.428.7400

City Attorney
Gregory W. Stepanicich
707.428.7419

City Clerk
Jeanette Bellinder
707.428.7384

City Treasurer
Oscar G. Reyes, Jr.
707.428.7496

DEPARTMENTS
Administrative Services
707.428.7394

Community Development
707.428.7461

Community Resources
707.428.7465

Finance
707.428.7496

Fire
707.428.7375

Police
707.428.7362

Public Works
707.428.7485

May 8, 2013

Jim Spering
C/O Solano Transportation Authority
Regional Transportation Impact Fee Policy Committee
One Harbor Center, Suite 130
Suisun City, CA 94585-2473

Dear Jim:

I have a conflict and will be unable to attend the Regional Transportation Impact Fee (RTIF) policy committee. As you are aware, Fairfield supports the implementation of a Regional Transportation Impact Fee and its inclusion in the Solano County Public Facilities Fee.

We have two comments for your consideration. First, we would like to see the unincorporated section of Peabody Road between Fairfield and Vacaville added to the list. The City and County have now agreed on the funding of this section of Peabody Road. We believe its inclusion in Package 1 is appropriate and we estimate the value of this section of Peabody Road to be $5 million.

The second comment relates to the value of the Fairfield portion of Jepson Parkway. We believe the $28 million value is significantly understated. Our estimate of the cost to complete the portions of Jepson Parkway in Fairfield is approximately $115 million.

We appreciate the opportunity to provide comments.

Sincerely,

SEAN P. QUINN
City Manager

SPQ/eh
cc: Daryl Halls
Mayor Harry Price

EXHIBIT D

City Of Benicia
PRELIMINARY ENGINEER'S OPINION OF PROBABLE COST
I-680/ Industrial Way/Bayshore Road/ Park Road Improvements

Prepared On: 8/12/2013

Prepared By: omni·means ENGINEERS · PLANNERS

No.	Description	Units	Quantity	Unit Cost	Amount
Existing Facilities					
1	Remove Concrete Barrier	LF	175	$ 30.00	$ 5,250
2	Removal of Metal Beam Guard Rail	LF	379	$ 10.00	$ 3,790
3	Removal of Existing Trees	EA	18	$ 500.00	$ 9,000
4	Relocate Existing Fence	LF	114	$ 24.00	$ 2,736
5	Relocate Existing Sign Structure	EA	1	$ 8,800.00	$ 8,800
Roadway					
6	Remove Thermoplastic Traffic Stripe	LF	2857	$ 1.50	$ 4,285
7	Remove Thermoplastic Pavement marking	SF	949	$ 7.00	$ 6,643
8	Cold Plan Asphalt Concrete	SQYD	15470	$ 9.00	$ 139,226
9	Roadway Excavation	CY	5881	$ 40.00	$ 235,236
10	Type A Asphalt Concrete	Ton	3551	$ 95.00	$ 337,328
11	Class 2 Aggregate Base	CY	3874	$ 40.00	$ 154,941
12	Concrete Sidewalk	SF	32040	$ 10.00	$ 320,400
13	Curb and Gutter	LF	8574	$ 20.00	$ 171,480
14	Driveway	EA	12	$ 3,000.00	$ 36,000
15	Curb Ramp	EA	27	$ 2,000.00	$ 54,000
16	Thermoplastic Traffic Stripe	LF	17600	$ 1.00	$ 17,600
17	Thermoplastic Pavement Markings	SF	1603	$ 6.50	$ 10,420
18	Roadside Signs	EA	40	$ 280.00	$ 11,200
19	Storm Drain Pipe & appurtenances	LF	1330	$ 300.00	$ 399,000
20	Storm Drain Inlet	EA	5	$ 3,000.00	$ 15,960
21	Street Lights and Pull Boxes	EA	19	$ 5,000.00	$ 93,029
22	Metal Beam Guard Rail	LF	2653	$ 17.00	$ 45,101
Traffic Signals					
22	Traffic Signal (New)	LS	1	$ 1,350,000.00	$ 1,350,000
Utilities					$ -
23	Relocate Utility Pole	EA	7	$ 5,000.00	$ 35,000
24	Remove Light Pole	EA	6	$ 2,000.00	$ 12,000
25	Adjust Utility to Grade	EA	25	$ 350.00	$ 8,750
Structural Items					
26	Bridge	SF	38500	$ 220.00	$ 8,470,000
Additional Miscellaneous Items					
27	Concrete Barrier (Type 60)	LF	320	$ 86.00	$ 27,520
Additional Miscellaneous Items					
28	Railroad Crossing Gate with Cantilevered Lights	EA	1	$ 110,000.00	$ 110,000
29	Relocate Railroad Crossing Gate	LS	1	$ 27,500.00	$ 27,500
30	Reconstruct Rail Road	LS	1	$ 20,000.00	$ 20,000
31	Minor Concrete (Rail Improvements)	CY	12	$ 780.00	$ 9,042
Right of Way					
32	Developed (landscaped/minor concrete)	SF	23070	$ 12.00	$ 276,836
33	Undeveloped	SF	67457	$ 8.00	$ 539,653
Environmental Mitigation					
34	Environmental Mitigation	LS	1	$ 50,000.00	$ 50,000
				Construction Subtotal	**$ 13,017,725**
	Contingency & Support Items				
35	Construction Cost Contingency	20%	1	$ 2,603,545.01	$ 2,603,545
36	PA&ED (Prelim Assesment & Envmt Review)	10%	1	$ 1,301,772.50	$ 1,301,773
37	PS&E (Plans Specifications & Estimate)	15%	1	$ 1,952,658.76	$ 1,952,659
38	Construction Management Support	5%	1	$ 650,886.25	$ 650,886
39	Right of Way Acquisition Support	5%	1	$ 650,886.25	$ 650,886
				Contingency Subtotal	**$ 7,159,749**
				Total	**$ 20,177,474**

DRAFT

EXHIBIT E

Exhibit E
Preliminary Engineer Cost Estimate

COLUMBUS PARKWAY WIDENING PROJECT

Item No.	Item Description	QTY	Unit	Unit Price	Item Total
Environmental					
1	Environmental Cost	1	LS	$75,000.00	$75,000.00
				Subtotal	**$75,000.00**
Design					
	Design Cost	1	LS	$140,000.00	$130,000.00
	Geotechnical Investigation	1	LS	$20,000.00	$20,000.00
				Subtotal	$150,000.00
Construction					
1	Mobilization	1	LS	$25,000.00	$25,000.00
2	Traffic Control	1	LS	$20,000.00	$20,000.00
3	SWPPP	1	LS	$10,000.00	$10,000.00
4	Clearing and Grubbing (Include Tree Removal)	1	LS	$20,000.00	$20,000.00
	Traffic Light System	1	LS	$250,000.00	$250,000.00
5	Grading (Cut/Fill)	1	LS	$50,000.00	$50,000.00
6	Relocation of Power Pole	3	EA	$15,000.00	$45,000.00
7	Site Adjustment	1	LS	$30,000.00	$30,000.00
8	AB (6")	256	CY	$90.00	$23,004.00
9	AC (5")	520	TON	$125.00	$65,000.00
10	Striping	1	LS	$10,000.00	$10,000.00
11	Advance Traffic Loop	2	EA	$4,000.00	$8,000.00
12	Misc. Site Adjustment	1	LS	$25,000.00	$25,000.00
1	Street Light	5	EA	$10,000.00	$50,000.00
				Subtotal	**$631,004.00**
				10% Contingency	$63,100.40
				Subtotal	**$694,104.40**
Construction Engineering					
	Construction Engineering Cost	1	LS	$104,116.00	$104,116.00
				Subtotal	**$104,116.00**
			Total	**$1,023,221.00**	