ATTACHMENT J
LIFE CYCLE COST ANALYSIS

Life Cycle Cost Analysis Form

The following sections were assumed for the PSR/PDS.

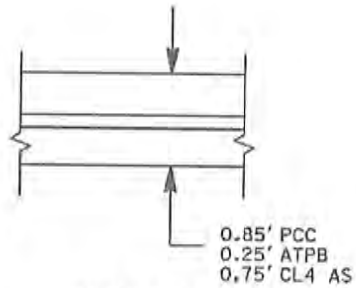

MAINLINE

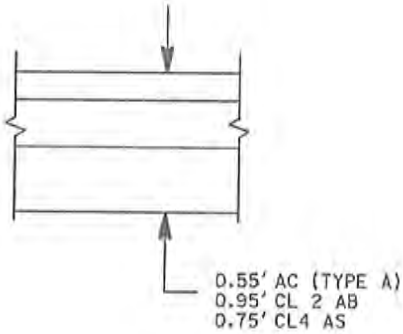

RAMPS

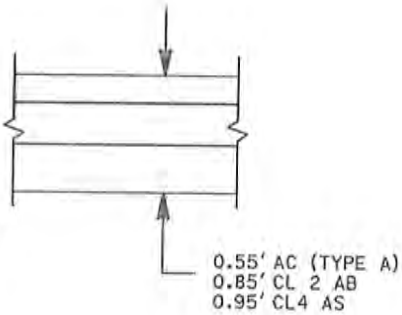

LOCAL ROADS

During the Project Approval/Environmental Document phase the pavement design shall either match the remaining pavement service life of the adjacent roadway (but not less than project design period of 20 years), or the pavement design life values in Table 612.2 of the Highway Design Manual depending on which has the lowest life-cycle costs. The Life Cycle Cost Analysis will be done during the PA/ED phase.