ATTACHMENT H
PRELIMINARY BRIDGE PLANNING STUDY

PREPARED FOR THE STATE OF CALIFORNIA - DEPARTMENT OF TRANSPORTATION

DIST.	COUNTY	ROUTE	POST MILES TOTAL PROJECT
04			

HDR Engineering, Inc
2121 N. California Blvd. Ste. 475
Walnut Creek, CA 94596

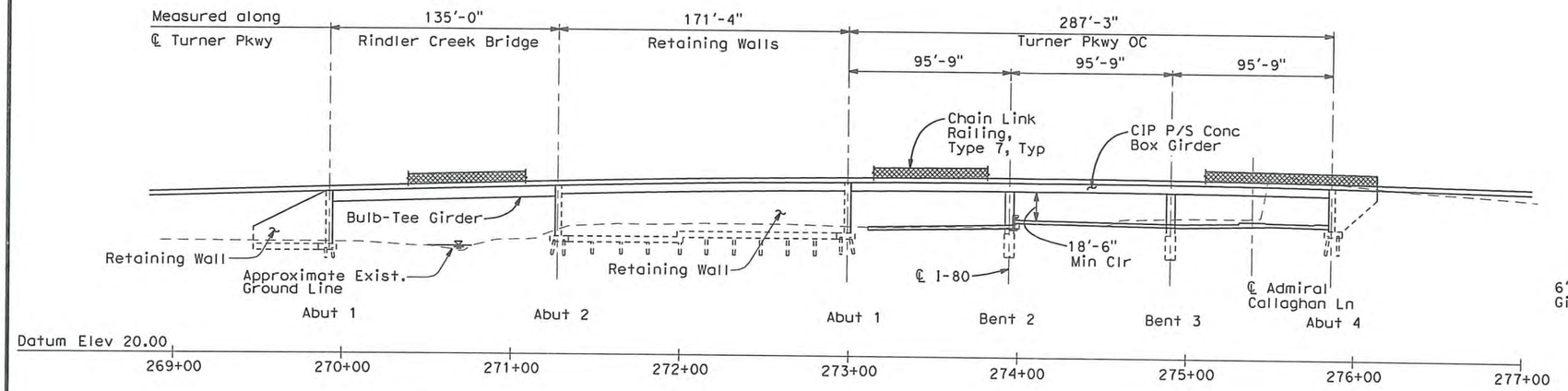

Note:
Traffic will pass through construction.
15'-0" min vertical clearance required under falsework.

ELEVATION
1"=40'-0"

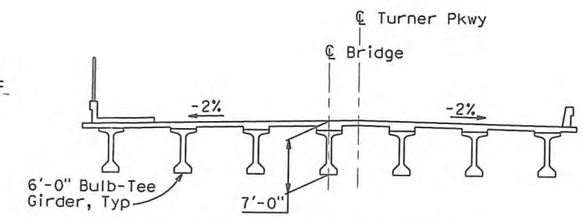

RINDLER CREEK BRIDGE

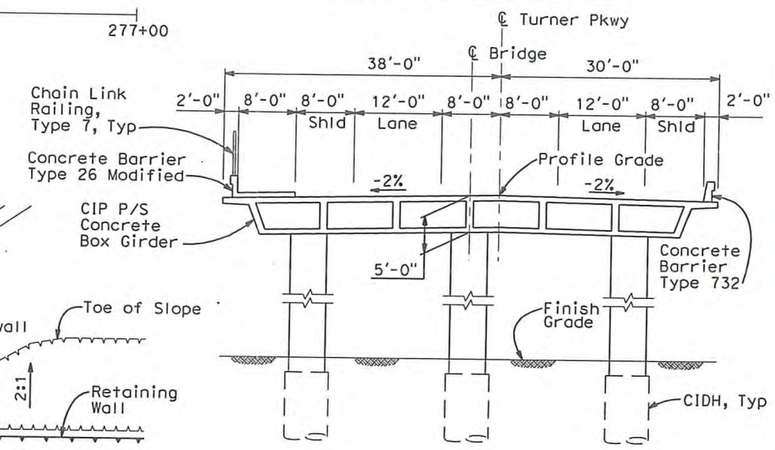

TURNER PKWY OC
TYPICAL SECTION
1"=10'-0"

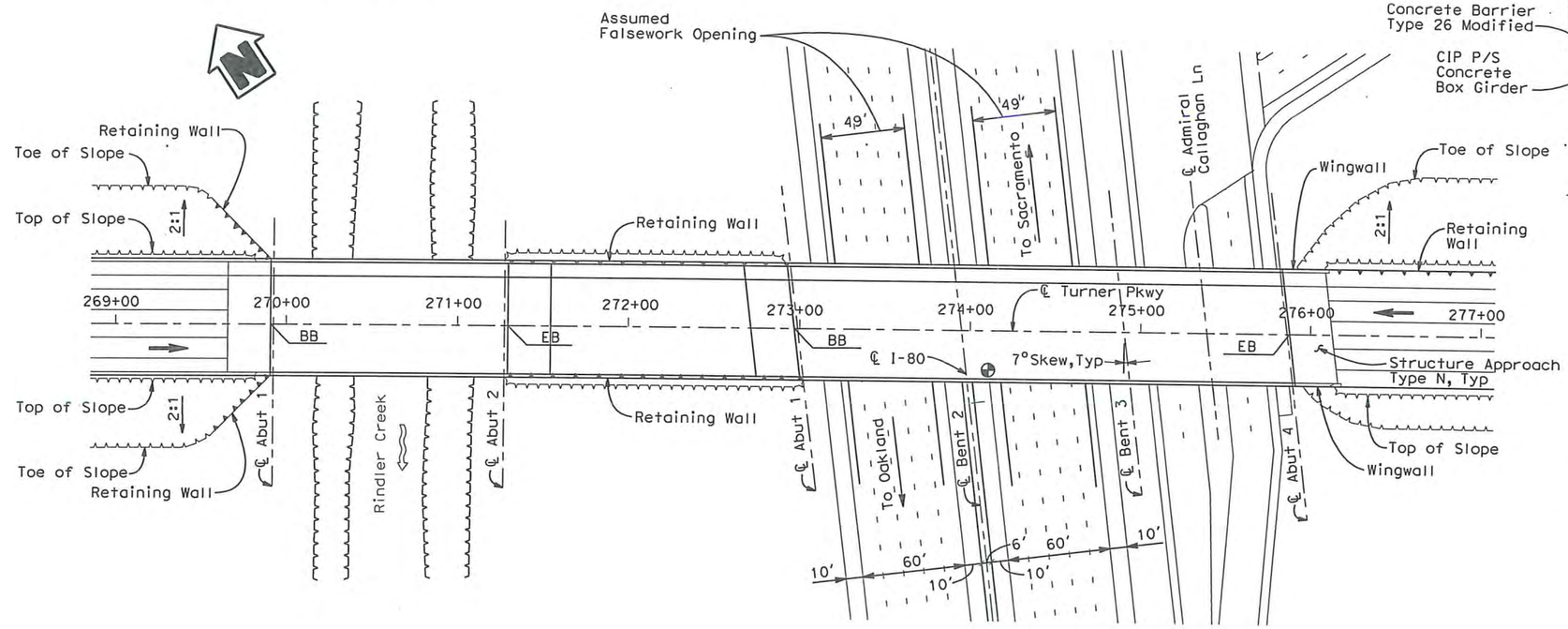

⊕ Indicates point of minimum vertical clearance.

PLAN
1"=40'-0"

Date of Estimate		March 2008
Structure Depth	=	Varies
Length	=	593'-7" (287'-3", 171'-4", 135'-0")
Width	=	68'-0"
Area	=	40,364 ft^2
Cost/SF including 10% Mobilization & 25% Contingency	=	$ 292
Total	=	$ 11,797,000

PRELIMINARY NOT FOR CONSTRUCTION

DESIGNED BY	K. Lim	DATE	3/24/08
DRAWN BY	I. Kukanego	DATE	3/24/08
CHECKED BY	J. Nauman	DATE	3/24/08
APPROVED		DATE	

PROJECT ENGINEER

PLANNING STUDY

Turner Pkwy OC & Rindler Creek Bridge

BRIDGE NO.	CU
SCALE: As Noted	EA

DESIGN OVERSIGHT

SIGN OFF DATE

ADVANCE PLANNING STUDY SHEET (ENGLISH) (REV. 2/25/05)

Date plotted: $DATE$

FILE => $FILE$

USERNAME => $USER$ DATE PLOTTED => $DATE$ TIME PLOTTED => $TIME$