ATTACHMENT H – TRAFFIC ANALYSIS SUMMARY MEMORANDUM

TRAFFIC FORECASTING MEMORANDUM

SR-12 REALIGNMENT / RIO VISTA BRIDGE PRELIMINARY STUDY

04-Sol-12-PM 19.3/03-SAC-12-PM 5.8

EA 04-4A490K

Submitted to:

California Department of Transportation
District 4 Transportation Planning & Local Assistance Mail Station: 10A
111 Grand Avenue
Oakland, CA 94612
Contact: Jason Mac
Tel: (510) 622-8891

Submitted by:

One Harbor Center, Suite 130
Suisun City, CA 94585
Contact: Janet Adams, PE
Tel: (707) 424-6010 Fax: (707) 424-6074

Prepared by:

LIM & NASCIMENTO ENGINEERING CORP.
11344 Coloma Road, Suite 590
Gold River, CA 95670
Contact: Steve Mislinski, PE
Tel: (916) 635-5233 Fax: (916) 635-5243

February, 2010

TABLE OF CONTENTS

I. INTRODUCTION

A. 2030 Future (No Project) Conditions

B. 2030 Future (Existing Route w/Mid-Level Bridge) Conditions

C. 2030 Future (Bypass w/High-Level Bridge) Conditions

II. ANALYSIS METHODOLOGY

A. Significance Criteria

III. TRAFFIC ANALYSIS

A. Existing Traffic Volumes / Operation

IV TRAFFIC VOLUME FORCASTS

A. Travel Demand Forecasting Methodology

B. Planned Transportation Improvements

C. Traffic Analysis

V. CONCLUSION

LIST OF TABLES

Table 1 – Level of Service Criteria – Signalized Intersections
Table 2 – Level of Service Criteria – Roadway Segments
Table 3 – Roadway Level of Service – Existing Conditions
Table 4 – Intersection Level of Service – Existing Conditions
Table 5 – 2030 Forecasted Traffic Volumes
Table 6 – Peak Hour Volume Threshold - Roadway Segments
Table 7 – Planned Transportation Improvements
Table 8 – Roadway Level of Service – 2030 No Project Conditions
Table 9 – Roadway Level of Service – 2030 Mid-Level Bridge Conditions
Table 10 – Roadway Level of Service – 2030 High-Level Bridge Conditions
Table 11 – Intersection LOS – 2030 No Project Conditions
Table 12 – Intersection LOS – 2030 Mid-Level Bridge Conditions
Table 13 – Intersection LOS – 2030 High-Level Bridge Conditions

LIST OF FIGURES

Figure 1: Project Location

I. INTRODUCTION

This Traffic Analysis summary memorandum presents the results of traffic analysis performed by the City of Fairfield using the Solano Napa Traffic Demand Model to assess the number of traffic lanes required for an SR 12 facility located along the existing route and for a bypass for the year 2030. This analysis is based on the forecasted traffic volumes for year 2030 between SR 113 and SR 160 in the City of Rio Vista, Solano County. Figure 1 illustrates the project location. This analysis examines traffic volumes and levels of service at intersections and roadway segment along SR 12 and a bypass under the following conditions:

- 2030 Future Forecast (No Project) Conditions;
- 2030 Future Forecast (Existing Route w/Mid-Level Bridge) Conditions;
- 2030 Future Forecast (Bypass w/High-Level Bridge) Conditions.

A. 2030 Future (No Project) Conditions

This alternative assumes that no major improvements will take place on SR 12 between SR 113 and SR 160 in the study area. The existing SR 12 is a 2 and 4 lane facility within the project limits.

B. 2030 Future (Existing Route w/Mid-Level Bridge) Conditions

Under this alternative, SR 12 will remain essentially in the existing alignment and will be improved to a four lane facility, two lanes in each direction with standard shoulders, in the east-west directions.

C. 2030 Future (Bypass w/High-Level Bridge) Conditions

Under this alternative, SR 12 facility will be shifted to a bypass alignment either to the north or south of the existing SR-12 from west of to the Rio Vista City limits to east of SR160 and will be a standard four-lane freeway (I-505) facility.

II. ANALYSIS METHODOLOGY

A. Significance Criteria

Traffic operations on study intersections and roadway segments were analyzed based on the *Highway Capacity Manual (2000)*. Table 1 displays the LOS criteria for signalized intersection and Table 2 daily volume thresholds for varies highway facility types.

Table 1 - Level of Service Criteria – Signalized Intersections

LOS	Control Delay per Vehicle (s/veh)
A	=<10
B	>10 - 20
C	>20 - 35
D	>35 - 55
E	>55 - 80
F	>80

Source: Highway Capacity Manual, 2000.

Table 2 - Level of Service Criteria – Roadway Segments

Facility Type	Number of lanes	Daily Volume Threshold				
		LOS				
		A	B	C	D	E
Arterial (1) (Low Access Control)	2 4	9,000 18,000	10,500 21,000	12,000 24,000	13,500 27,000	15,000 30,000
Arterial (2) (Moderate Access Control)	2 4	10,800 21,600	12,600 25,200	14,400 28,800	16,200 32,400	18,000 36,000
Arterial (3) (High Access Control)	2 4	12,000 24,000	14,000 28,000	16,000 32,000	18,000 36,000	20,000 40,000

(1) Low access control roads generally have frequent driveways and speeds of 25 to 35 mph.
(2) Medium access control roads generally have limited driveways and speeds of 35 to 45 mph.
(3) High access control roads generally have no driveways and speeds of 45 to 55 mph.

Source: Del Rio Hills Planned Development, Traffic Impact Analysis, Fehr & Peers, June 11, 2007.

III. TRAFFIC ANALYSIS

A. Existing Traffic Volumes / Operation

Existing traffic volumes along SR 12 used for analysis documented in this memorandum were obtained from the City of Fairfield, and are based on the Del Rio Hills Planned Development Traffic Impact Analysis report dated June 11, 2007.

Traffic operations were conducted at the study roadway segments along SR 12 and intersections between SR 113 and SR 160. Table 3 and 4 summarize the results of this analysis.

Table 3 - Roadway Level of Service – Existing Conditions

Roadway Segment	Existing Conditions				
	Lanes	Type	Volume	V/C	LOS
SR 12 – SR 113 to Summerset	2	Arterial (3)	16,900	0.85	D
SR 12 – Summerset to Church	2	Arterial (3)	18,900	**0.95**	**E**
SR 12 – Church to Main St	2	Arterial (2)	18,600	**1.03**	**F**
SR 12 – Main St to River Rd	2	Arterial (2)	18,800	**1.04**	**F**
SR 12 – River Rd to SR 160	2	Arterial (3)	21,000	**1.05**	**F**

(2) = 2-lane moderate access controlled arterial (see Table 2)
(3) = 2 lane high access controlled arterial (see Table 2)

Table 4 - Intersection Level of Service – Existing Conditions

Intersection	Existing Conditions				
	Control	AM		PM	
		Delay	LOS	Delay	LOS
SR 12 / SR 113	TWSC	34	D	**>50**	**F**
SR 12 / Summerset	SIGNAL	7	A	8	A
SR 12 / Church Rd	TWSC	18	C	**>50**	**F**
SR 12 / Main St	SIGNAL	21	C	27	C
SR 12 EB / River Rd	TWSC	13	B	30	D
SR 12 WB / River Rd	TWSC	17	C	20	C
SR 12 / SR 160	SIGNAL	28	C	45	D

IV TRAFFIC VOLUME FORECASTS

This section summarizes the methodology used to develop traffic Volume forecasts and presents daily roadway segment and AM & PM peak hour forecasts for the following scenarios:

- 2030 with No Project Conditions
- 2030 with Mid-Level Bridge along existing route Conditions
- 2030 with High-Level Bridge and bypass Conditions

A. Travel Demand Forecasting Methodology

Traffic volume forecasts for the scenarios listed above were developed by the City of Fairfield and are based on volumes from the City's forecasting. In general, the forecasting methodology included the development of "through traffic" growth using the Solano Napa Traffic Demand model.

Table 5 presents the forecasted traffic volumes for the daily, am & pm for 2030 Scenarios and Table 6:

Table 5 – Existing and 2030 Forecasted Traffic Volumes

Location		2008 Existing Volumes (1)		2030 Forecasted Volumes (2) (No Project)		2030 Forecasted Volumes (2) (Mid-Level Bridge)		2030 Forecasted Volumes (2) (High-Level Bridge)	
		vph		vph		vph			
		AM	PM	AM	PM	AM	PM	AM	PM
SR 12 SR 113 to Summerset	EB	261	895	977	1662	2005	2668	2725	2760
	WB	811	576	1651	1112	2297	1954	2901	2477
SR 12 Summerset to Church Rd	EB	320	1098	1495	1777	1981	2068	2414	2167
	WB	995	707	1557	1550	1946	1961	2193	2187
SR 12 Church Rd to Main St	EB	359	1229	1544	1697	1894	1879	3033	2438
	WB	1114	791	1500	1568	1817	1885	2498	2761
SR 12 Main to River Rd	EB	359	1229	1132	1261	1702	1660	3033	2438
	WB	1114	791	1062	1231	1704	1842	2498	2761
SR 12 River Rd to SR 160	EB	366	1253	1284	1411	2388	2341	3033	2438
	WB	1136	805	1222	1430	2034	2264	2498	2761

(1) Source: Caltrans 2008 AADT and OTM32420 Peak Hour Volume Data, 05/14/2009
(2) Source: City of Fairfield, Traffic Forecast Model, March, 2008.

Table 6 – Peak Hour Volume Threshold - Roadway Segments

Location		Peak Hour Volume Threshold (1) (2030 No Project)		Peak Hour Volume Threshold (1) (2030 Mid-Level Bridge)		Peak Hour Volume Threshold (1) (2030 High-Level Bridge)	
		Lanes	Capacity	Lanes	Capacity	Lanes	Capacity
SR 12, SR 113 to Summerset	EB	1	1600	2	2800	2	4000
	WB	1	1600	2	2800	2	4000
SR 12, Summerset to Church Rd	EB	2	1800	2	1800	2	4000
	WB	2	1800	2	1800	2	4000
SR 12, Church Rd to Main St	EB	2	1800	2	1800	2	4000
	WB	2	1800	2	1800	2	4000
SR 12, Main to River Rd	EB	2	1800	2	1800	2	4000
	WB	2	1800	2	1800	2	4000
SR 12, River Rd to SR 160	EB	1	900	2	1800	2	4000
	WB	1	900	2	1800	2	4000
(1) Source: City of Fairfield, Traffic Forecast Model, March, 2008.							

B. Planned Transportation Improvements

Improvements to SR12 identified by the Solano Transportation Authority (Future Roadway projects) were added to the year 2030 No Project and Mid-Level Condition scenarios. Table 7 lists these improvements. A four-lane freeway was assumed as the other long-term improvement to the SR12 corridor between SR 113 and SR160. These improvements were added to the 2030 High-Level Bridge Conditions scenario, where SR 12 is considered as an alignment to the south of the existing SR-12, but results are also applicable to a northern bypass.

Table 7 – Planned Transportation Improvements

Project Name	Project Description	Original Lane Configuration	New Lane Configuration	Source
SR 12 Operations and Safety Improvements	From Rio Vista CL to Suisun City Limit (Phase 1)	1 EB,1 WB	1 EB, 1 WB	Bay Area RTP
SR 12 Widening	Widen SR 12 from 2 lanes to 4 lanes from Summerset Rd to Rio Vista Bridge	1 EB,1 WB	2 EB, 2 WB	Countywide Travel Model Runs
Source: Future Roadway Projects (Review Draft), Solano County, January 10, 2007.				

This analysis assumes that the planned improvements will be in place along the roadway segments and intersections of SR12 between SR 113 and SR 160.

C. Traffic Analysis

Traffic Operation analyses were performed along the roadway segments of SR 12 between SR 113 and SR 160 for the future conditions using the forecasted volumes. The analysis were performed based the HCM 2000 Methodology and based on the daily volume thresholds for varies highway facility types presented in the City's forecasting. Table 8 summarizes the results of the analysis for the roadway segments of SR 12 for the No Project Scenario.

Table 8 - Roadway Level of Service – 2030 No Project Conditions

Roadway Segment	2030 No Project Conditions					
	Lanes	Direction	AM		PM	
			V/C	LOS	V/C	LOS
SR12 – SR113 to Summerset	1	EB	0.61	B	**1.04**	**F**
	1	WB	**1.03**	**F**	0.69	B
SR12 – Summerset to Church Rd	2	EB	0.83	D	**0.99**	**E**
	2	WB	0.86	D	0.86	D
SR12 – Church Rd to Main St	2	EB	0.86	D	**0.94**	**E**
	2	WB	0.83	D	0.87	D
SR12 – Main St to River Rd	2	EB	0.63	B	0.70	C
	2	WB	0.59	A	0.68	B
SR12 – River Rd to SR 160	1	EB	**1.43**	**F**	**1.57**	**F**
	1	WB	**1.36**	**F**	**1.59**	**F**

Table 9 summarizes the results of the analysis for the roadway segments of SR 12 for the Mid-Level Bridge Scenario.

Table 9 - Roadway Level of Service – 2030 Mid-Level Bridge Conditions

Roadway Segment	2030 Mid-Level Bridge Conditions					
	Lanes	Direction	AM		PM	
			V/C	LOS	V/C	LOS
SR12 – SR113 to Summerset	2	EB	0.72	C	**0.95**	**E**
	2	WB	0.82	D	0.70	C
SR12 – Summerset to Church Rd	2	EB	**1.10**	**F**	**1.15**	**F**
	2	WB	**1.08**	**F**	**1.09**	**F**
SR12 – Church Rd to Main St	2	EB	**1.05**	**F**	**1.04**	**F**
	2	WB	**1.00**	**F**	**1.05**	**F**
SR12 – Main St to River Rd	2	EB	**0.95**	**E**	**0.92**	**E**
	2	WB	**0.95**	**E**	**1.02**	**F**
SR12 – River Rd to SR 160	2	EB	**1.33**	**F**	**1.30**	**F**
	2	WB	**1.13**	**F**	**1.26**	**F**

Table 10 summarizes the results of the analysis for the roadway segment of SR 12 for the High-Level Bridge Scenario.

Table 10 - Roadway Level of Service – 2030 High-Level Bridge Conditions

Roadway Segment	2030 High-Level Bridge Conditions					
	Lanes	Direction	AM		PM	
			V/C	LOS	V/C	LOS
I-515 (SR12) – SR113 to Summerset	2	EB	0.68	B	0.82	D
	2	WB	0.73	C	0.70	C
I-515 (SR12) – Summerset to Church Rd	2	EB	0.60	B	0.66	B
	2	WB	0.55	A	0.62	B
I-515 (SR12) – Church Rd to SR 160	2	EB	0.76	C	0.74	C
	2	WB	0.62	B	0.78	C
I-515 (SR12) – SR 160 to SR 12	2	EB	0.67	B	0.51	A
	2	WB	0.42	A	0.67	B

Table 11 summarizes the results of the analysis for the intersections along SR 12 for the 2030 No Project Scenario.

Table 11 - Intersection LOS – 2030 No Project Conditions

Intersection	2030 No Project Conditions				
	Control	AM		PM	
		Delay	LOS	Delay	LOS
SR 12 / SR 113	SIGNAL	**141.0**	**F**	**138.8**	**F**
SR 12 / Summerset	SIGNAL	14.6	B	23.1	C
SR 12 / Church Rd	SIGNAL	**128.7**	**F**	**173.9**	**F**
SR 12 / Main St	SIGNAL	**83.2**	**F**	**158.5**	**F**
SR 12 / SR 160	SIGNAL	**134.8**	**F**	**120.7**	**F**

Table 12 summarizes the results of the analysis for the intersections along SR 12 for the 2030 Mid-Level Bridge Scenario.

Table 12 - Intersection LOS – 2030 Mid-Level Bridge Conditions

Intersection	2030 Mid-Level Bridge Conditions				
	Control	AM		PM	
		Delay	LOS	Delay	LOS
SR 12 / SR 113	SIGNAL	19.1	B	41.5	D
SR 12 / Summerset	SIGNAL	29.3	C	31.6	C
SR 12 / Church Rd	SIGNAL	35.7	D	37.8	D
SR 12 / Main St	SIGNAL	37.6	D	33.0	C
SR 12 EB Ramps/River Rd	SIGNAL	12.4	B	14.6	B
SR 12 WB / SR 160	SIGNAL	25.3	C	38.1	D
SR 12 EB Ramps / SR 160	SIGNAL	41.7	D	30.4	C

Table 13 summarizes the results of the analysis for the intersections along SR 12 for the 2030 High-Level Bridge Scenario.

Table 13 - Intersection LOS – 2030 High-Level Bridge Conditions

Intersection	2030 Mid-Level Bridge Conditions				
	Control	AM		PM	
		Delay	LOS	Delay	LOS
SR 12 EB Ramps / SR 113	SIGNAL	8.5	A	7.8	A
SR 12 WB Ramps / SR 113	SIGNAL	4.5	A	19.3	B
SR 12 EB Ramps / Church Rd	SIGNAL	5.1	A	5.7	A
SR 12 WB Ramps / Church Rd	SIGNAL	5.8	A	3.3	A
SR 12 Ramps / SR 160	SIGNAL	28.8	C	4.9	D

V. CONCLUSION

It is concluded that the planned transportation improvements at the roadway segments and study intersections along SR 12 will improve the traffic operations at these locations. The intersections will operate at LOS D or better for the 2030 Mid-Level Bridge Conditions comparing with 2030 No Project Conditions, however SR 12 will experience unacceptable level of service for the 2030 Mid-Level Bridge Conditions for all the SR 12 roadway segments from SR 113 to SR 160. Widening SR 12 at the Sacramento Bridge will improve the operational characteristics at this location by providing the planned four (4) lanes divided roadway segment. This roadway segment will continue to operate at unacceptable Level of Service for both 2030 Scenarios (No Project and Mid-Level Bridge); however the Volume to Capacity (v/c) ratio will drop by 21% (1.59 to 1.26) due to the added capacity to this roadway segment within the project limits. It is anticipated that the SR12 roadway segments will continue to operate unsatisfactory at LOS E and F with the planned improvements for the 2030 Mid-Level Conditions.

The analysis for the 2030 Bypass with High Level Bridge shows that all intersections at freeway ramp intersections and the freeway segments will operate at LOS D or better for this scenario.

For both alternatives analyzed, a Mid-level Bridge along the existing route and a Bypass with a High Level Bridge, the forecasting indicates that a facility of at least four lanes is required.

[THIS PAGE INTENTIONALLY LEFT BLANK]

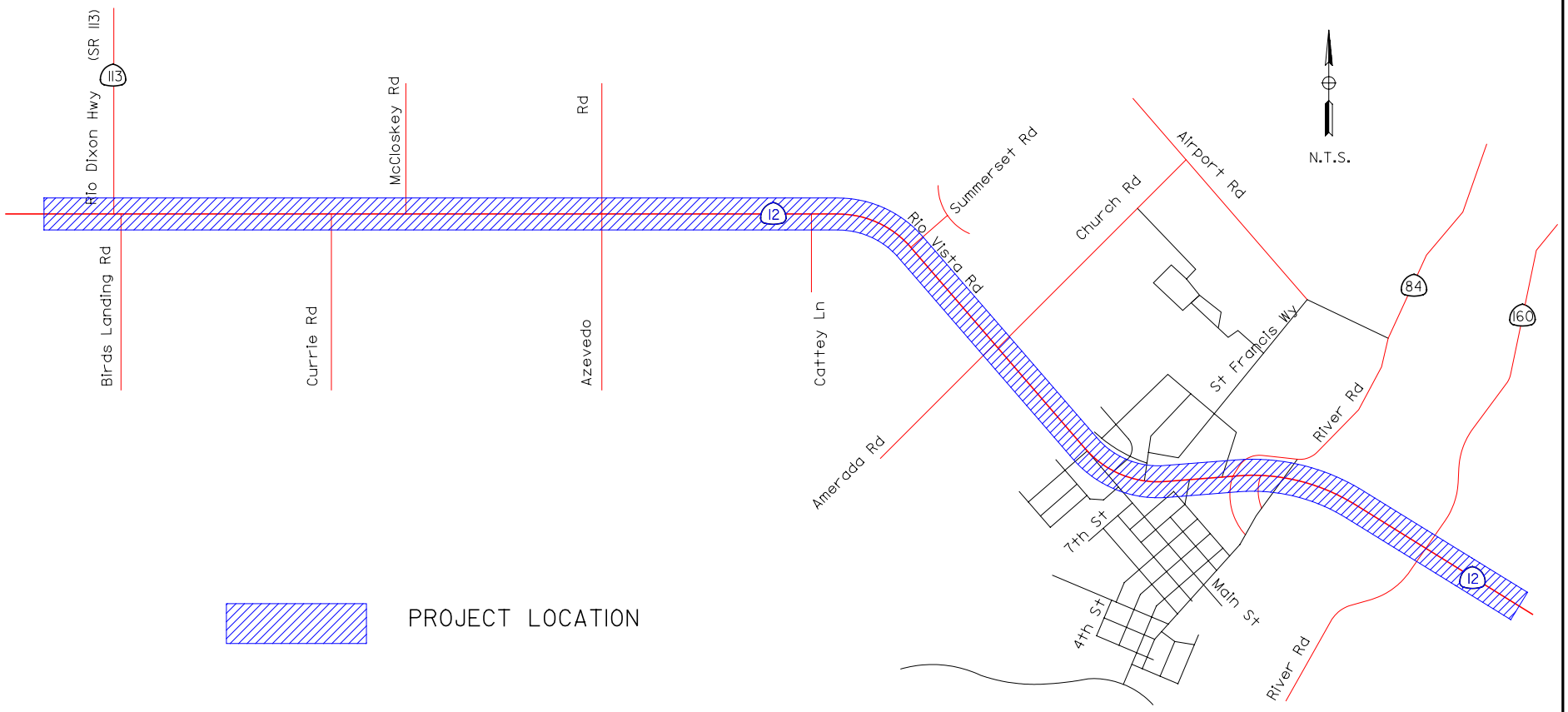

IAN ENGINEERING

11344 Coloma Road, Suite 590
Gold River, CA 95670
(916) 635-5233 Fax: (916) 635-5243

STATE ROUTE 12 - TRAFFIC ANALYSIS

Project Location (Existing SR 12 Alignment)

FIGURE 1

[THIS PAGE INTENTIONALLY LEFT BLANK]

2030 AM No Project
blue=lanes
green=v/c

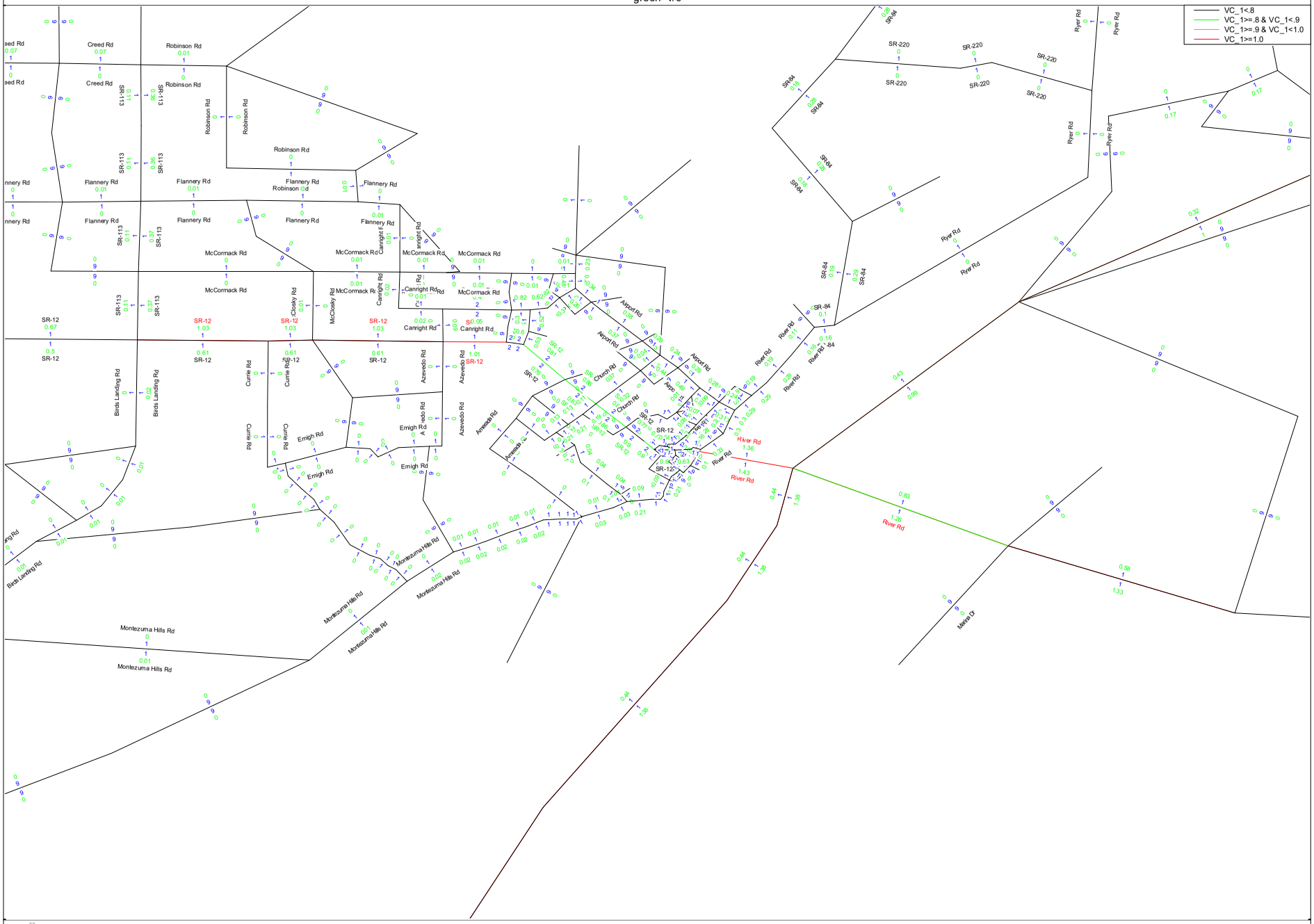

Licensed to City of Fairfield

2030 AM No Project
blue=lanes
green=v/c

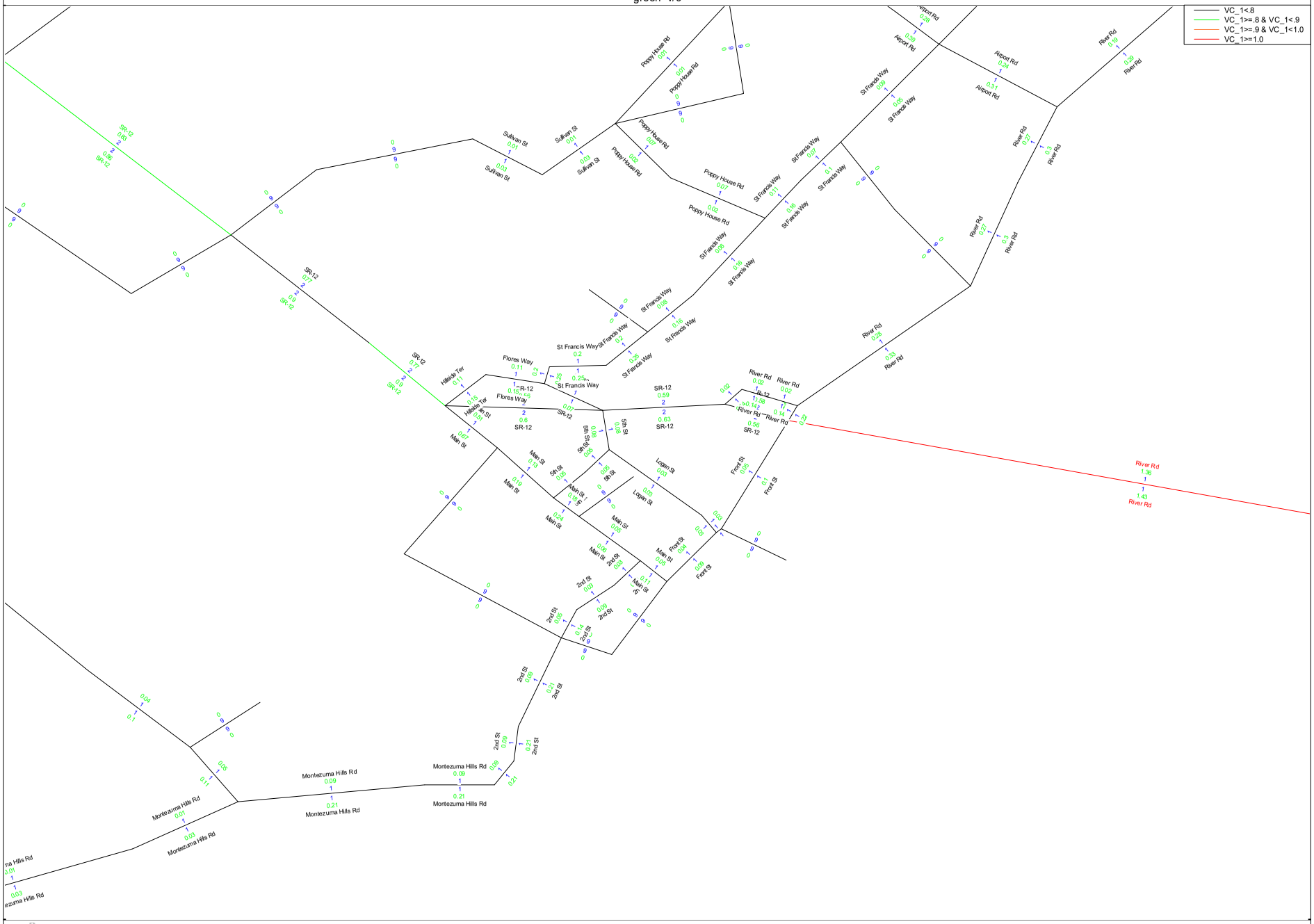

Licensed to City of Fairfield

2030 AM No Project
blue=volume
green=capacity

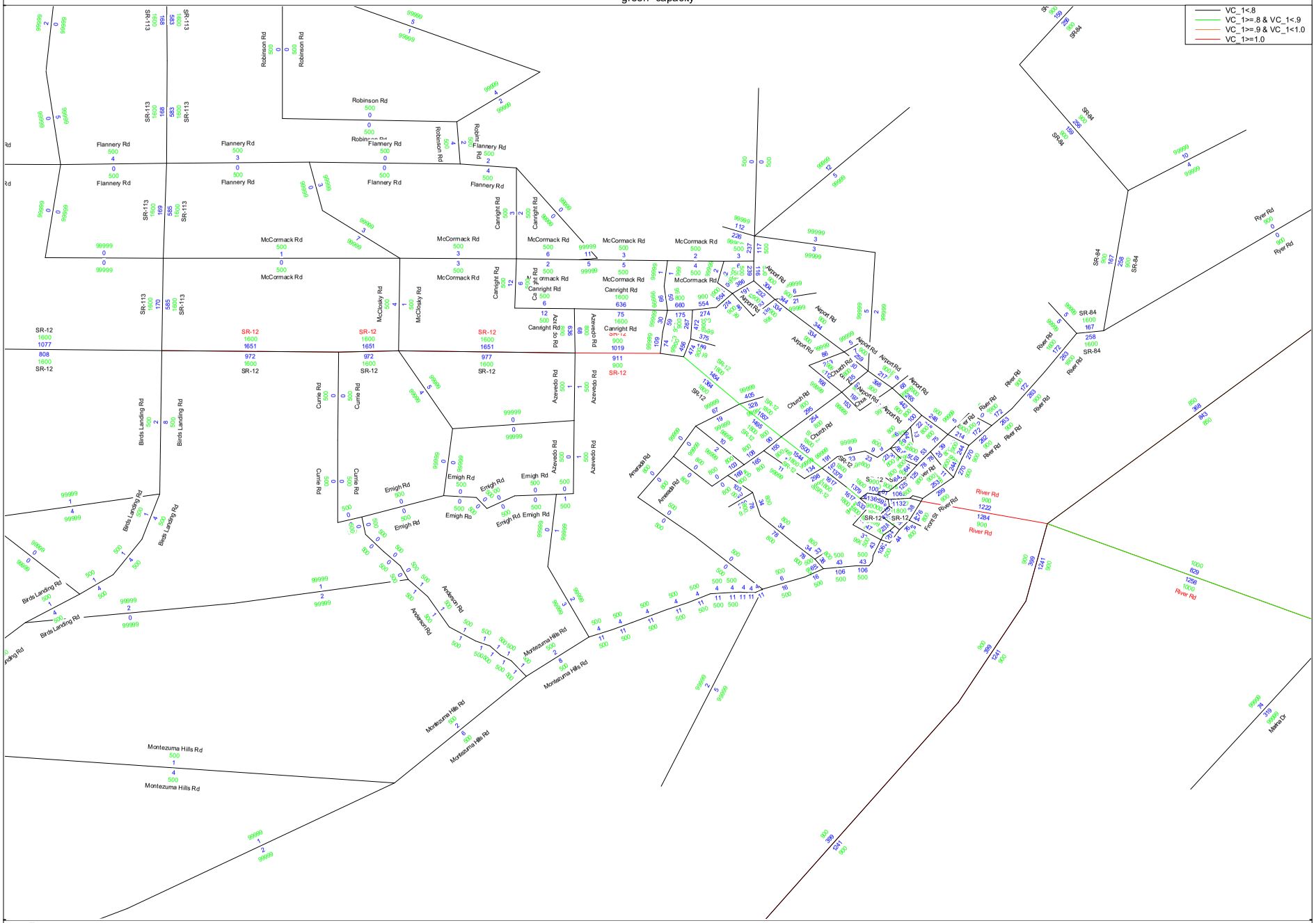

Licensed to City of Fairfield

2030 AM No Project
blue=volume
green=capacity

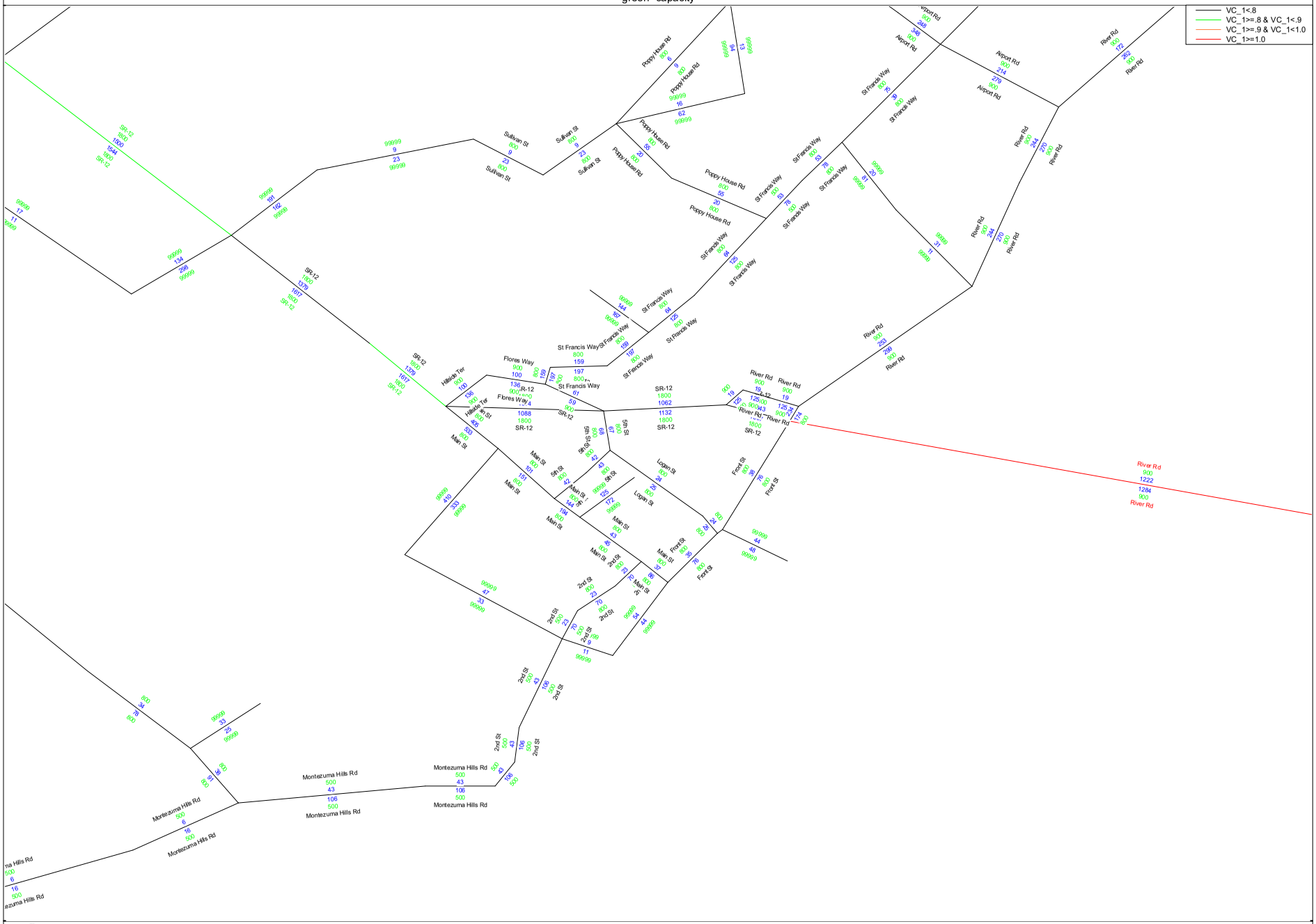

Licensed to City of Fairfield

2030 PM No Project
blue=lanes
green=v/c

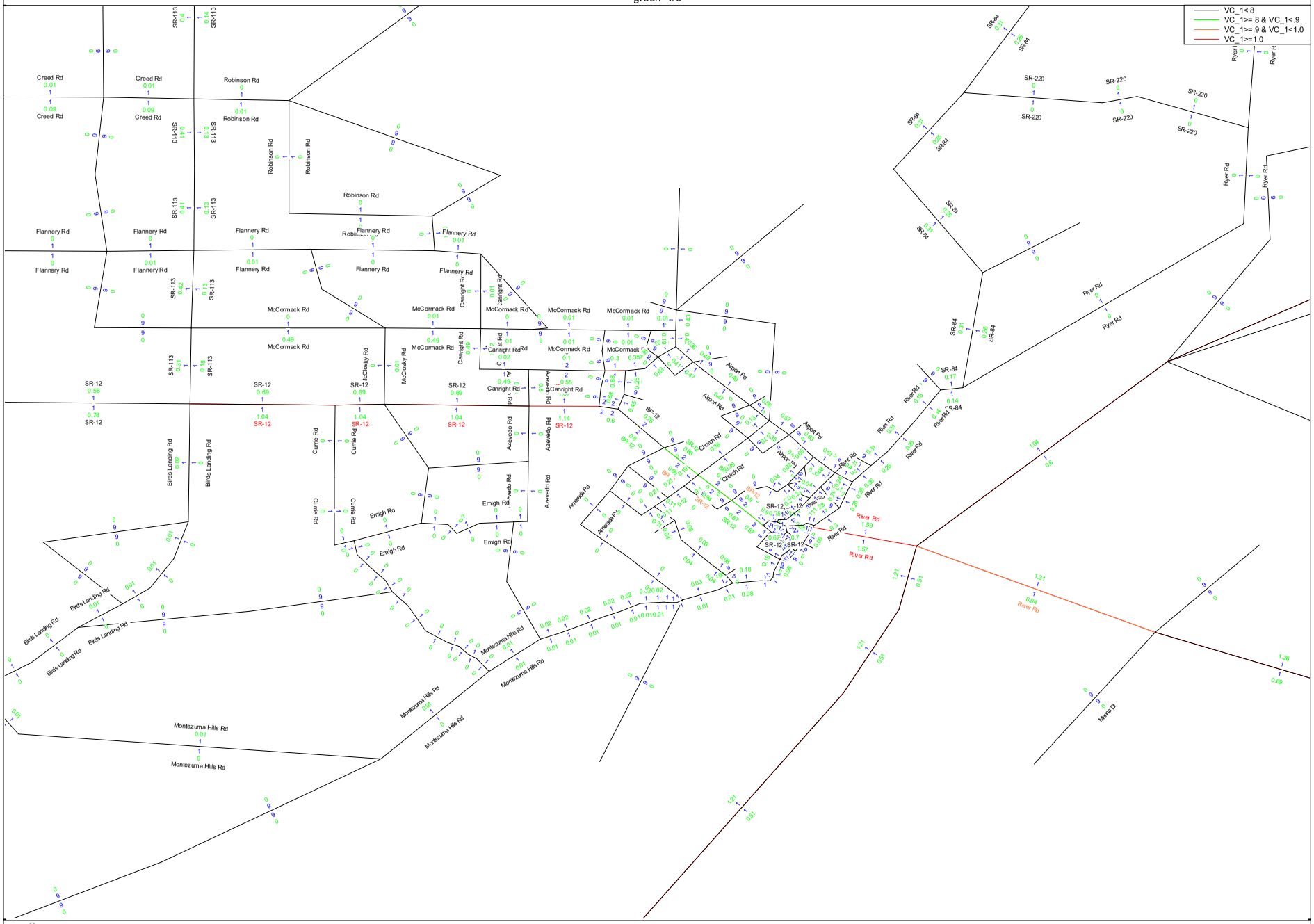

Licensed to City of Fairfield

2030 PM No Project
blue=lanes
green=v/c

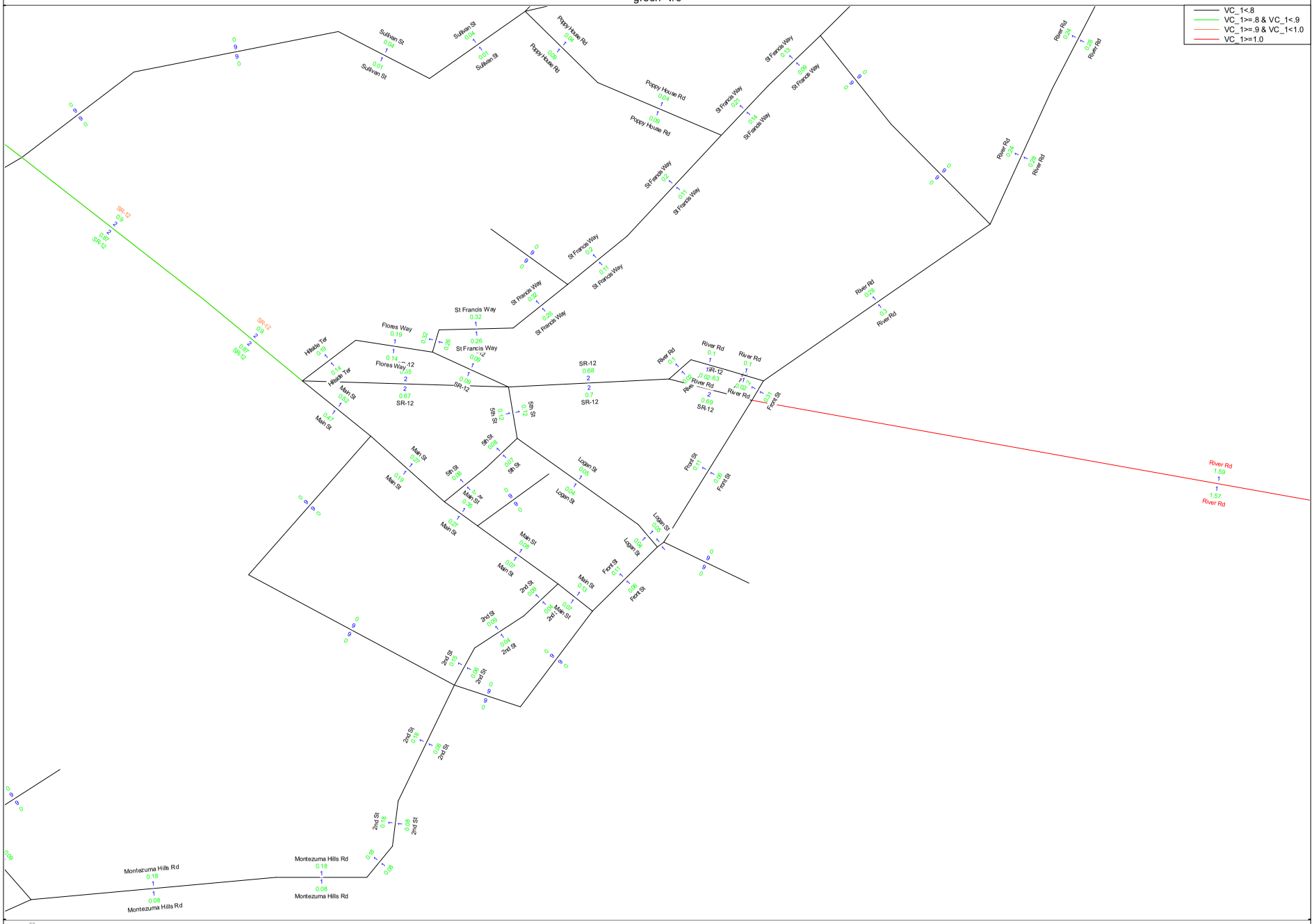

Licensed to City of Fairfield

2030 PM No Project
blue=volume
green=capacity

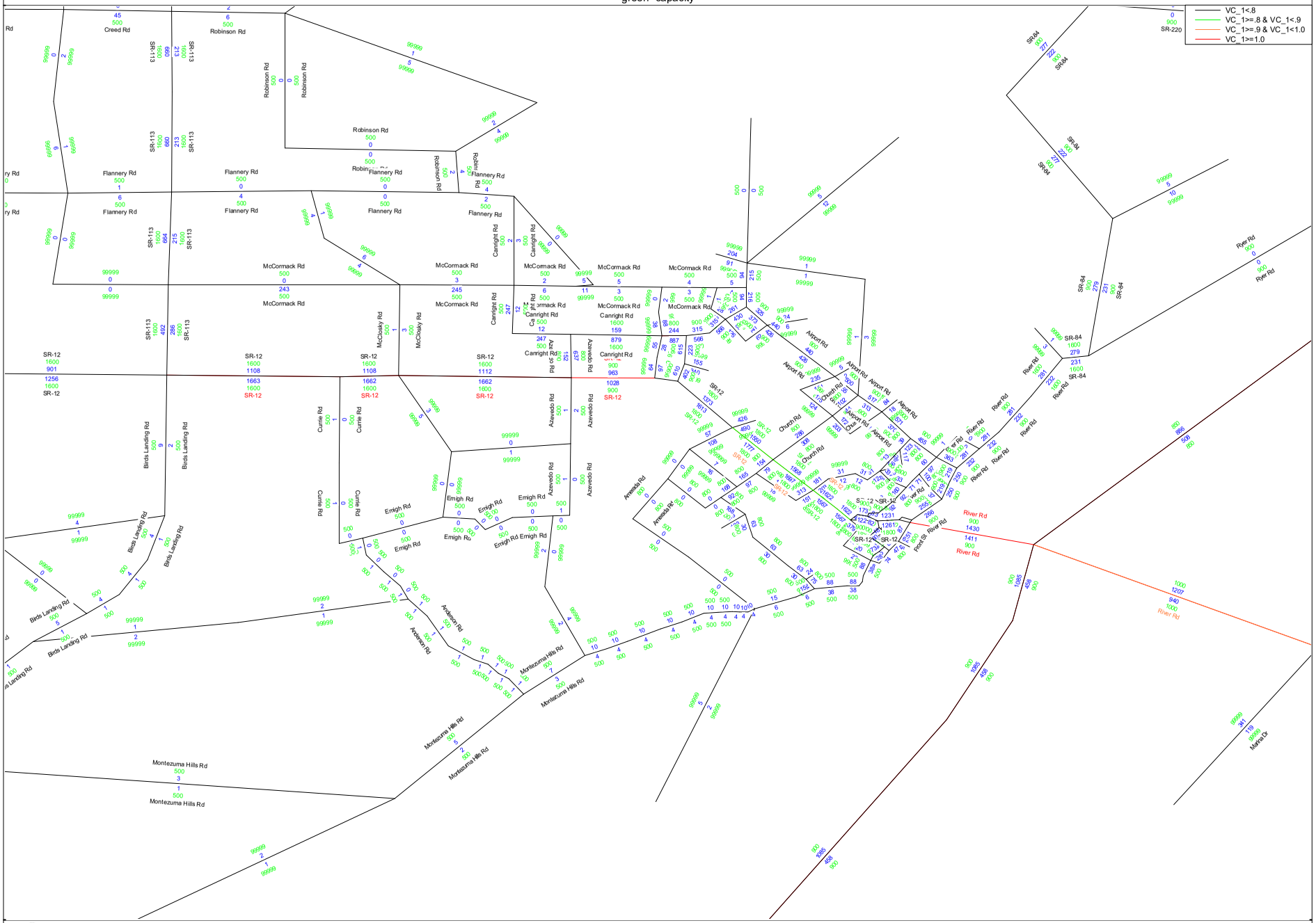

Licensed to City of Fairfield

2030 PM No Project
blue=volume
green=capacity

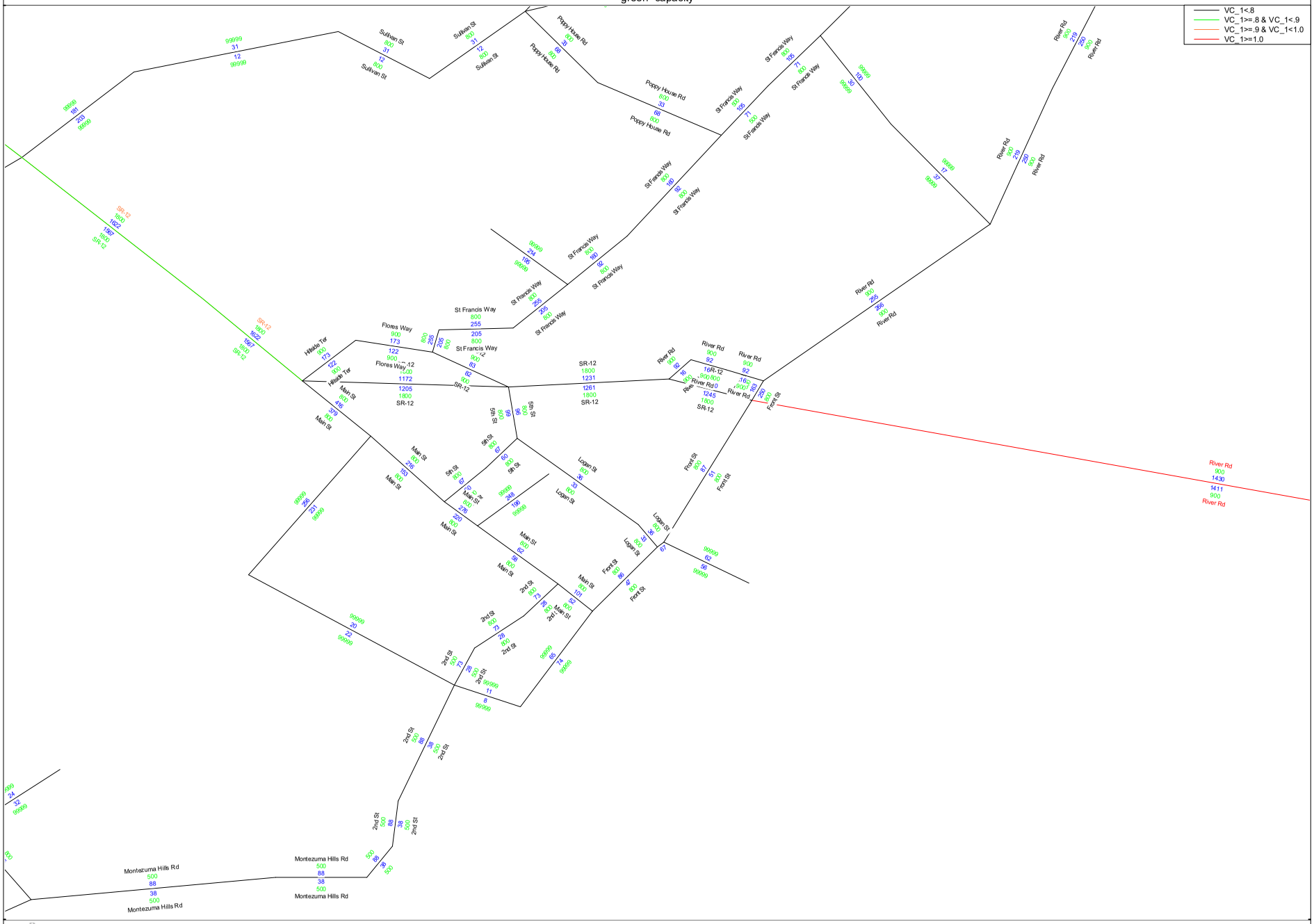

Licensed to City of Fairfield

2030 AM with Mid Level Bridge
blue=lanes
green=v/c

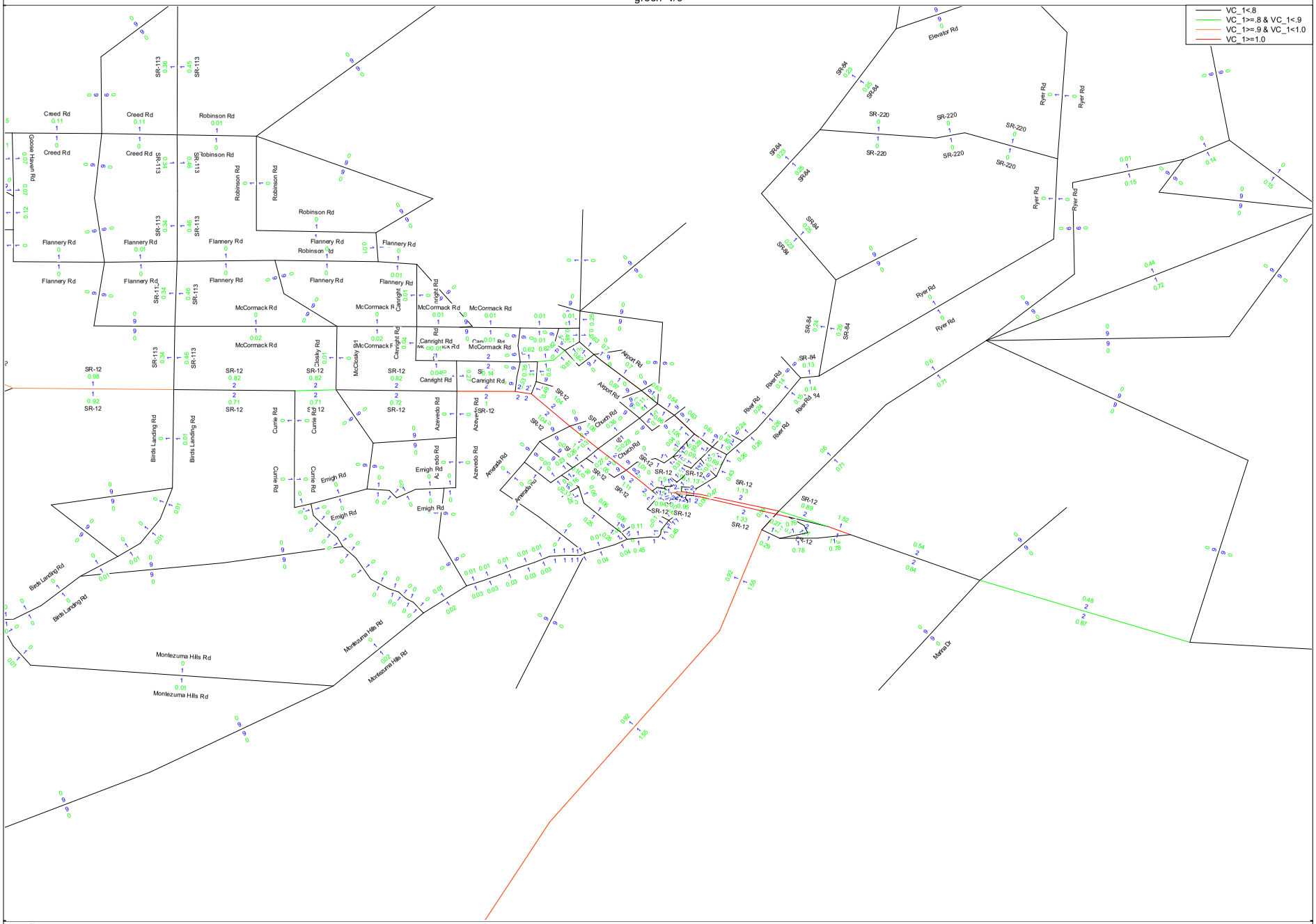

Licensed to City of Fairfield

2030 AM with Mid Level Bridge
blue=lanes
green=v/c

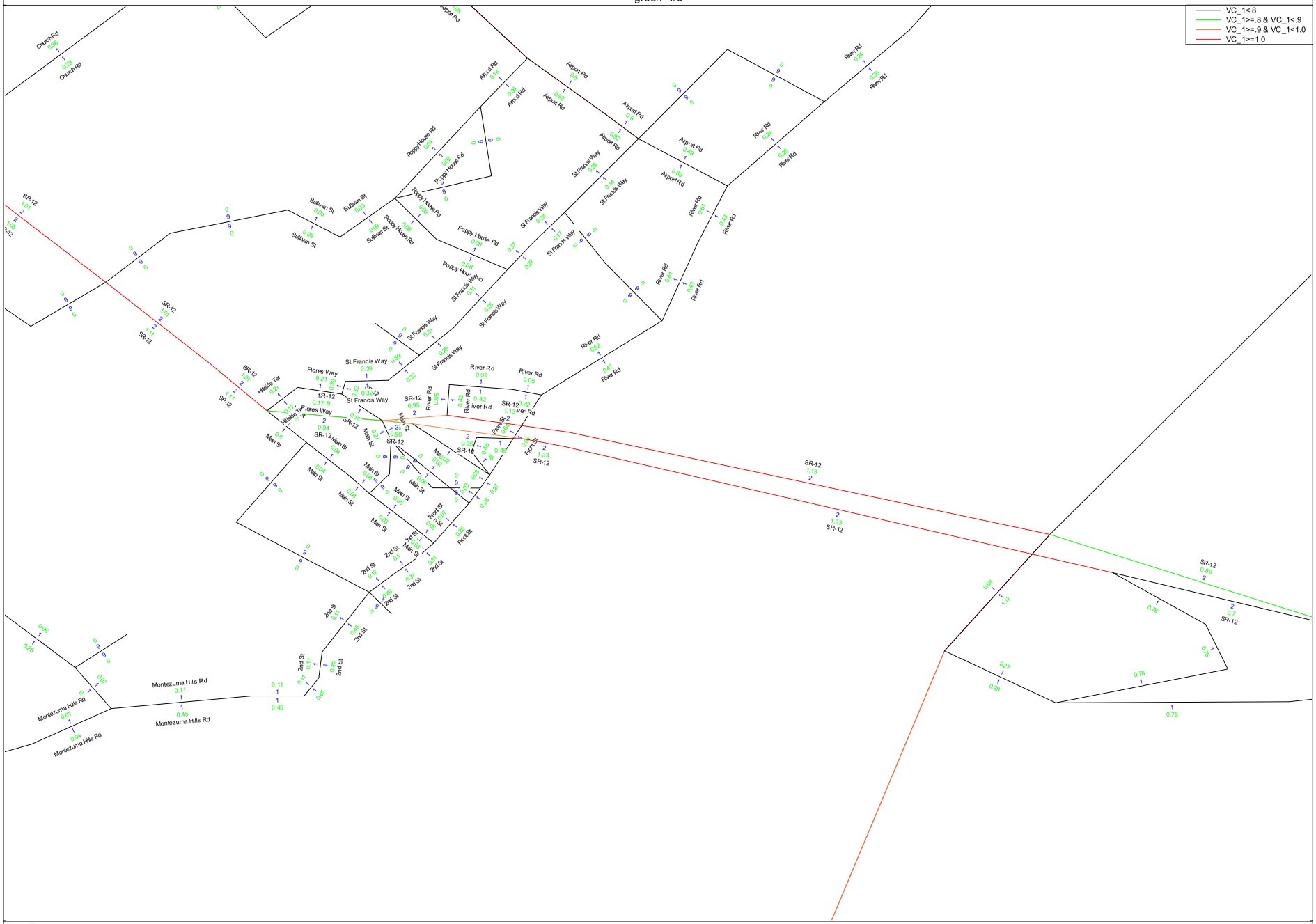

Licensed to City of Fairfield

2030 AM with Mid Level Bridge
blue=volume
green=capacity

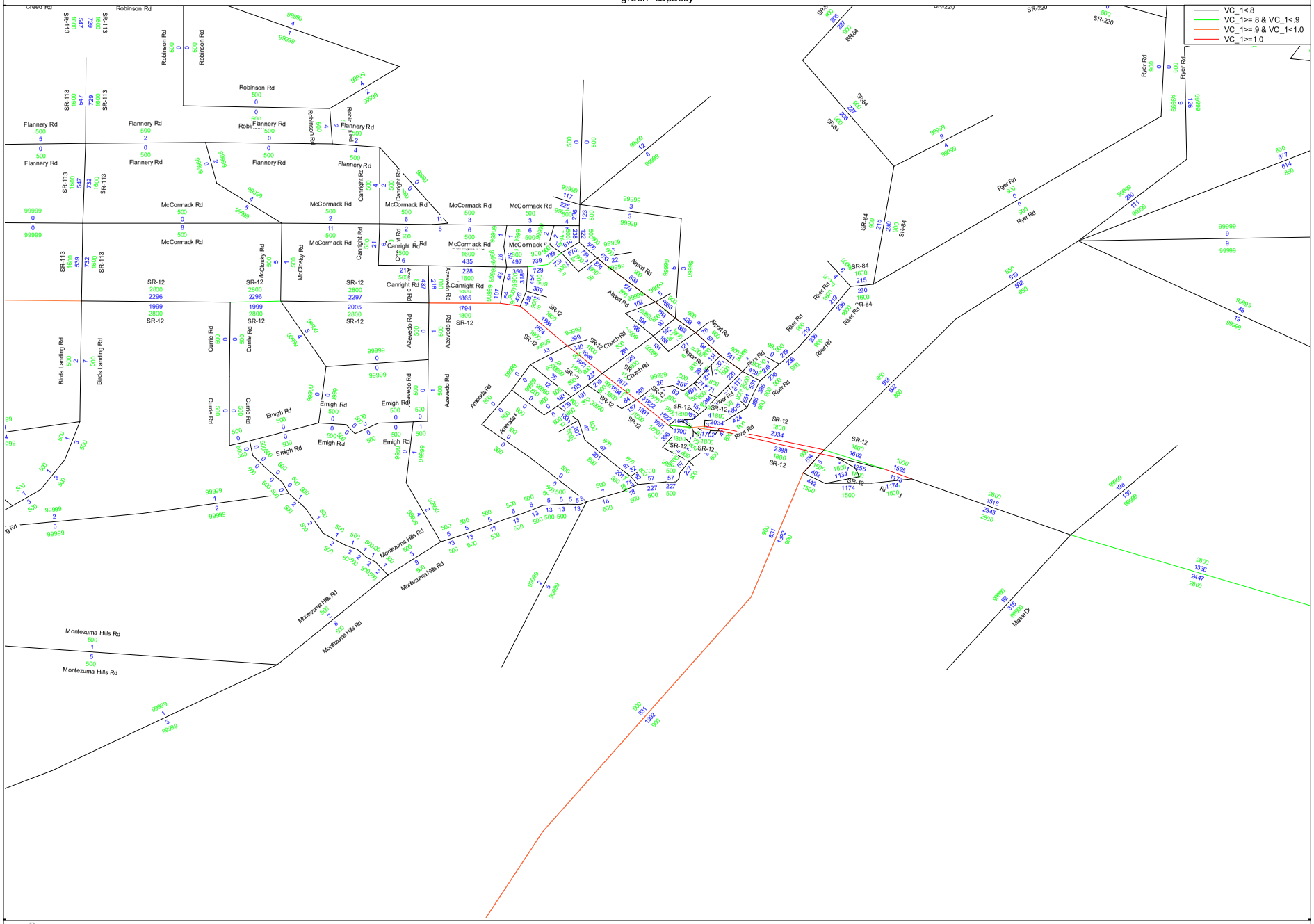

Licensed to City of Fairfield

2030 AM with Mid Level Bridge
blue=volume
green=capacity

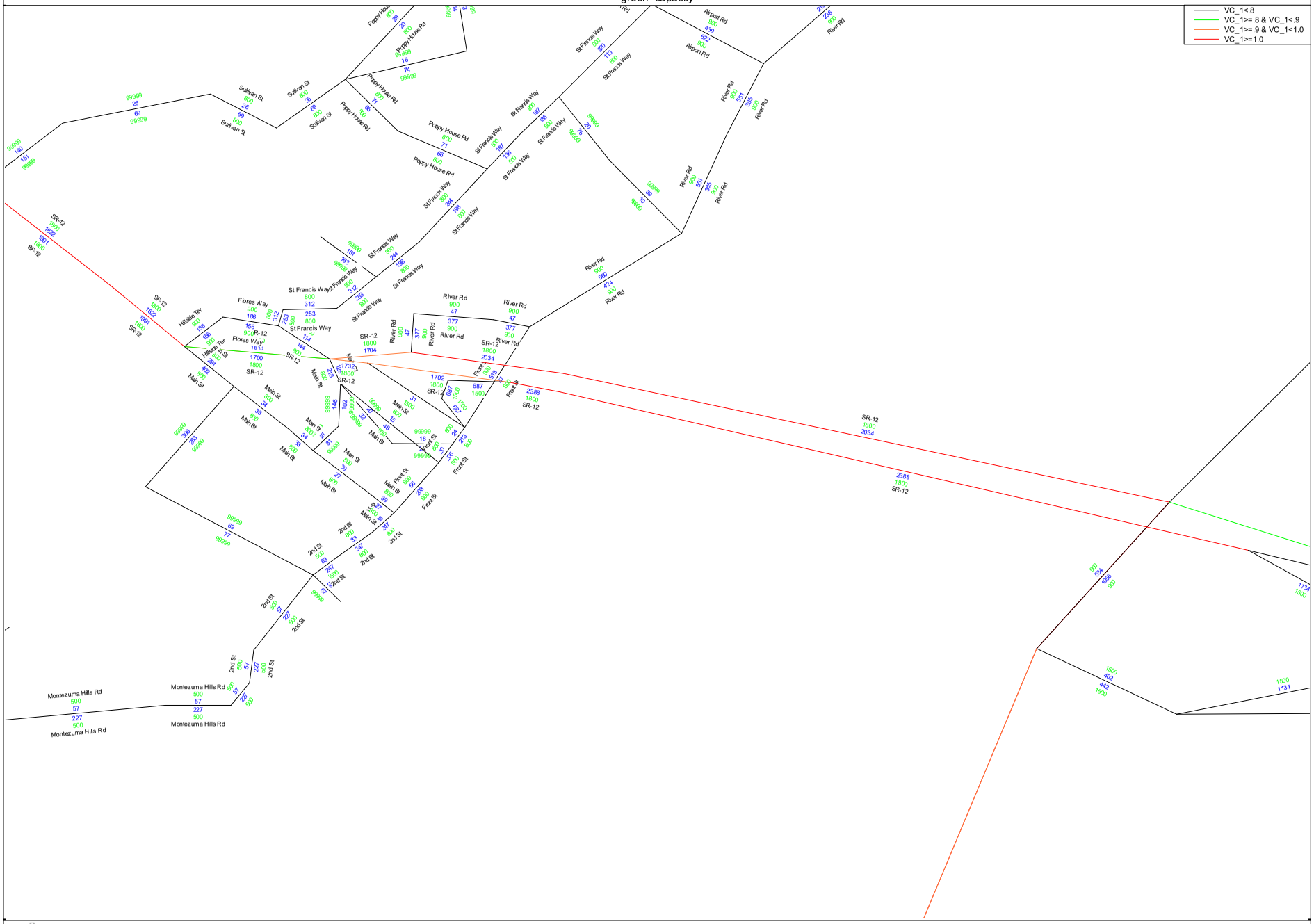

Licensed to City of Fairfield

2030 PM with Mid Level Bridge
blue=number lanes
green=v/c

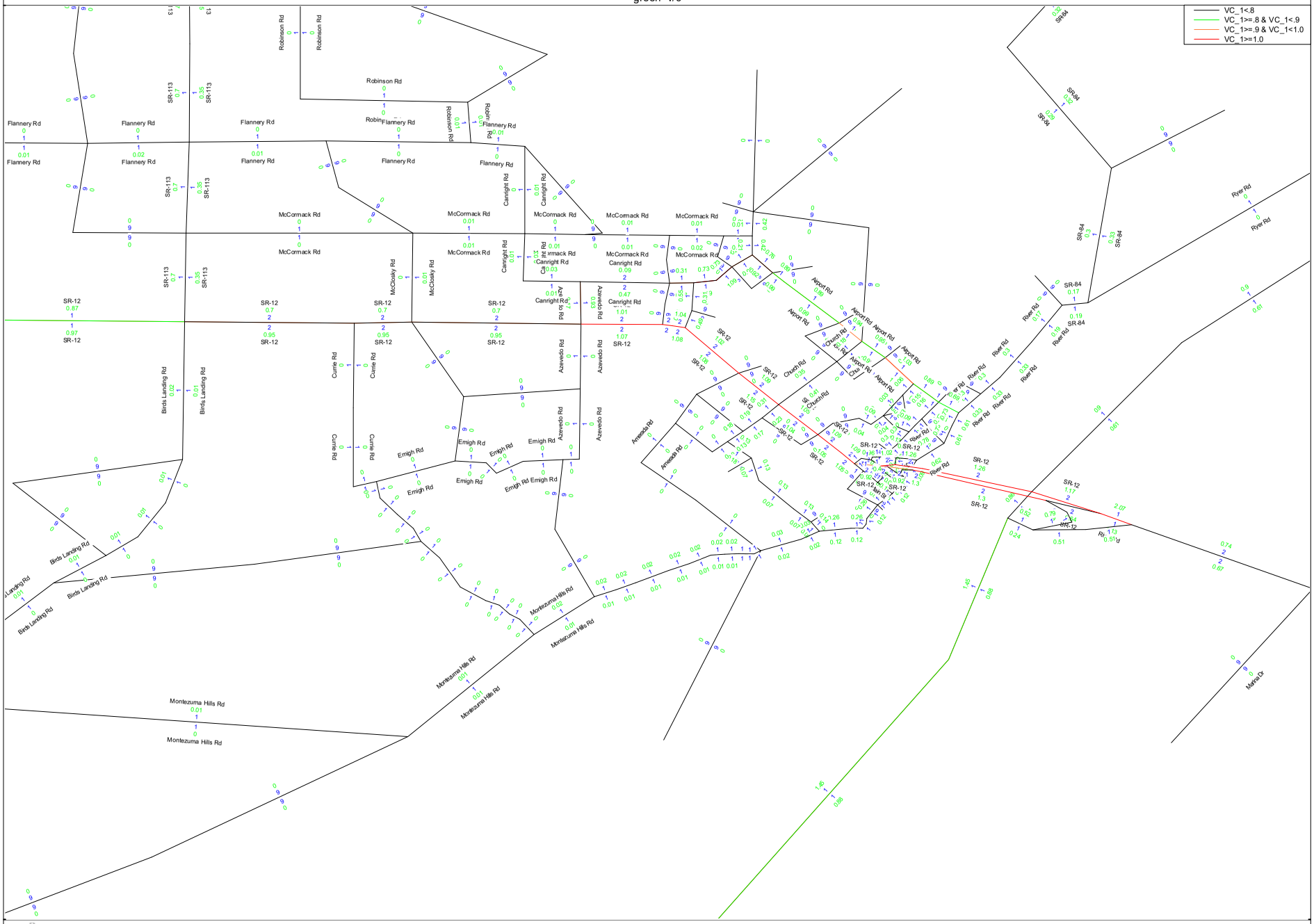

Licensed to City of Fairfield

2030 PM with Mid Level Bridge
blue=number lanes
green=v/c

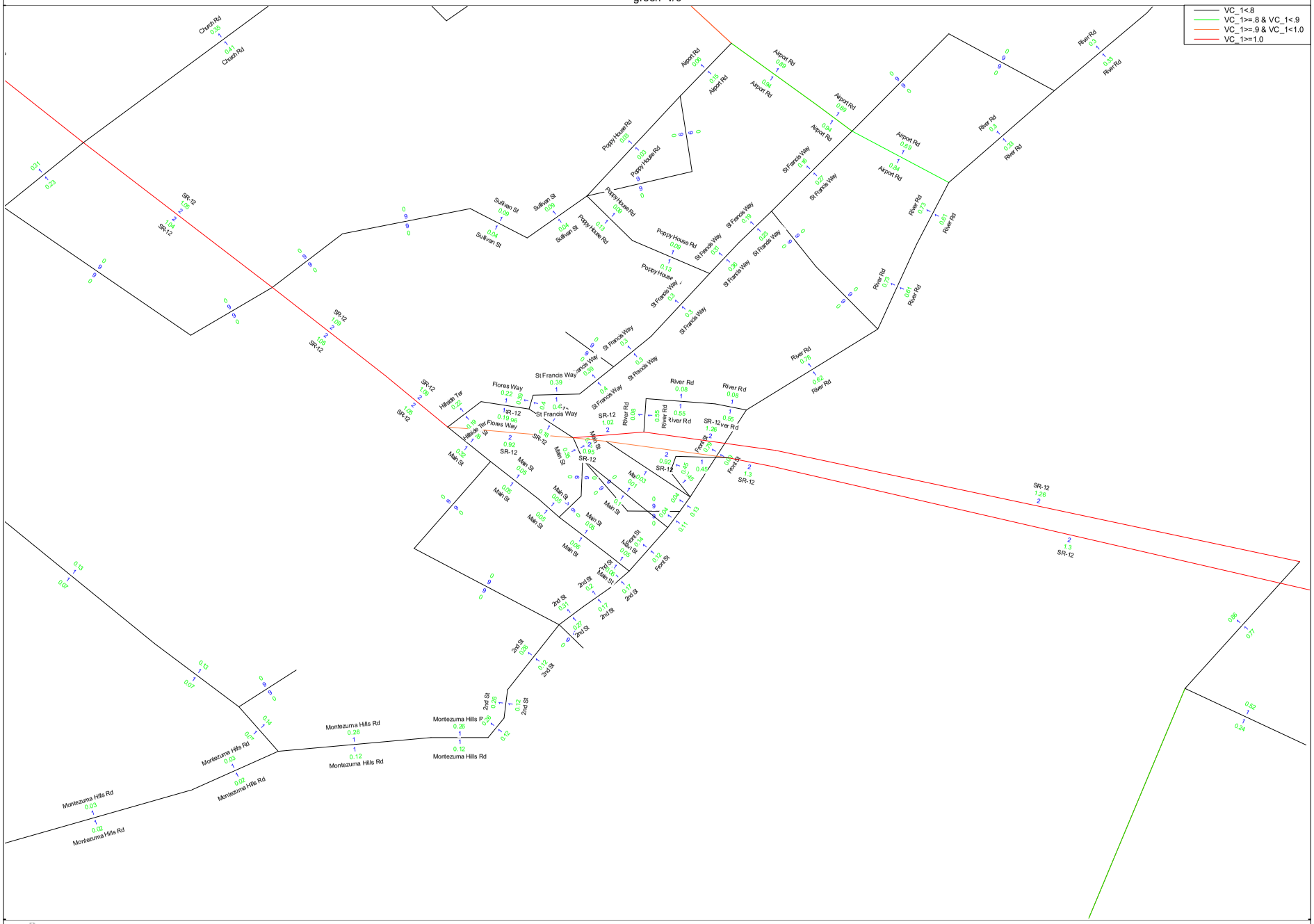

Licensed to City of Fairfield

2030 PM with Mid Level Bridge
blue=volume
green=capacity

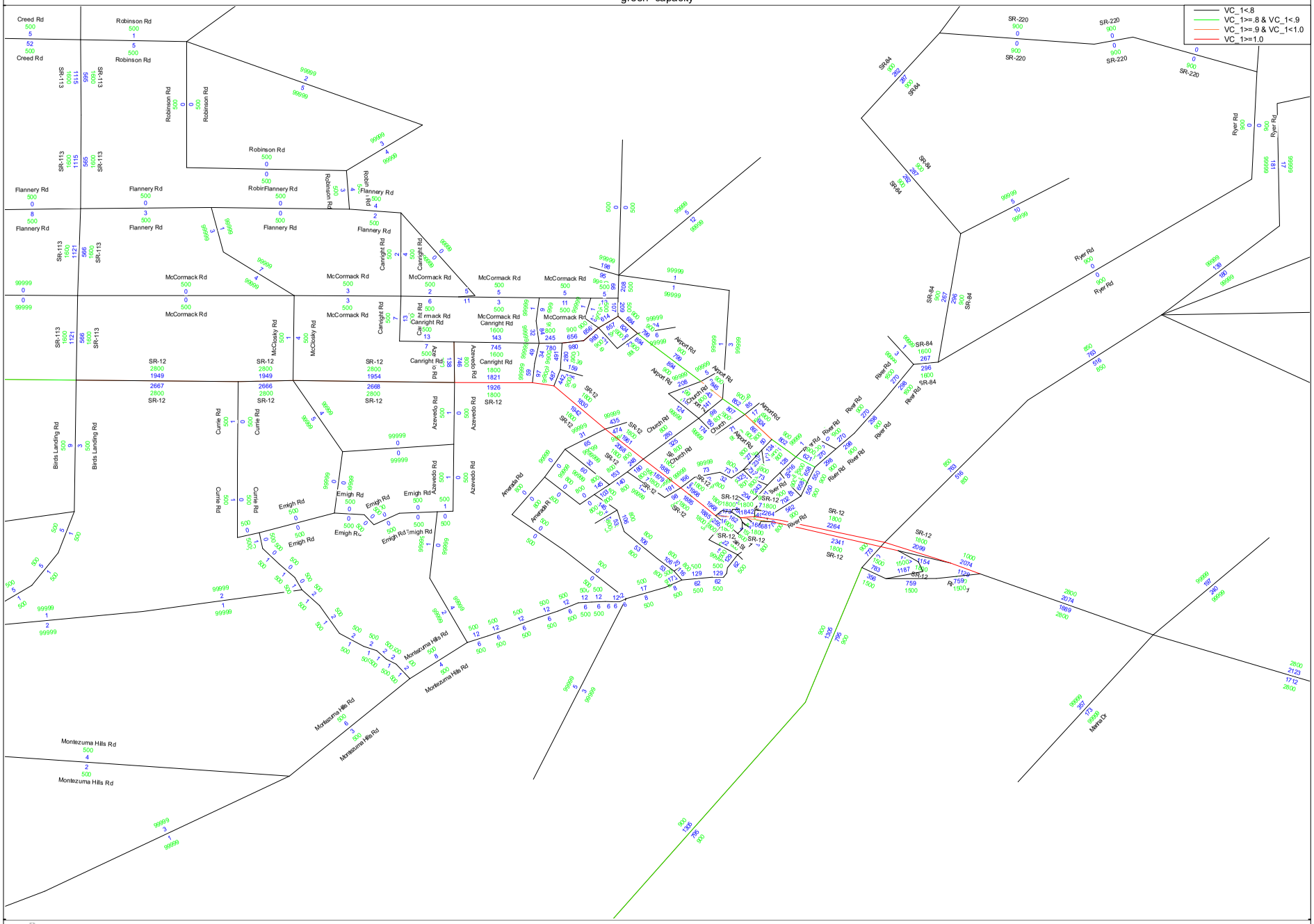

Licensed to City of Fairfield

2030 PM with Mid Level Bridge
blue=volume
green=capacity

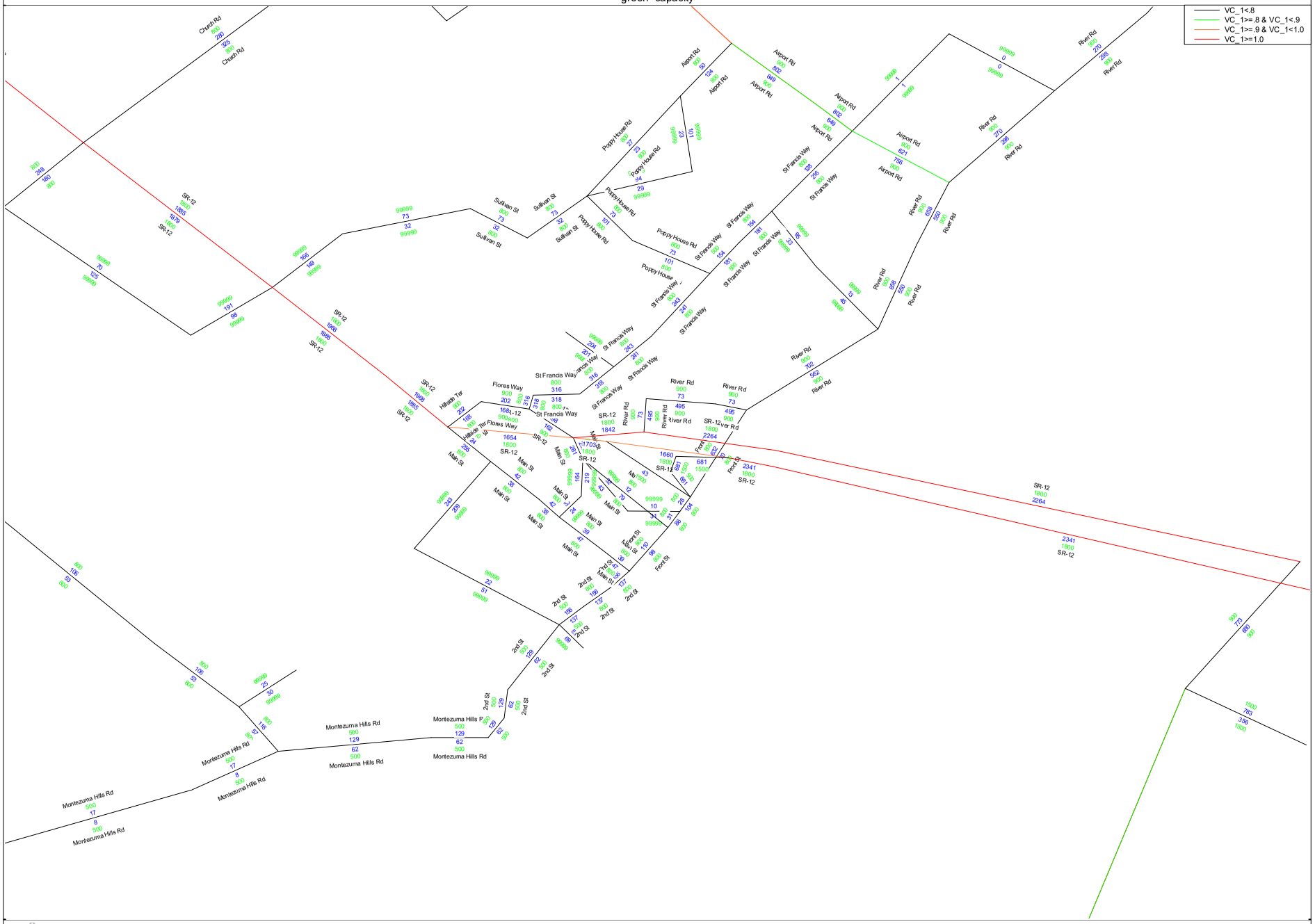

Licensed to City of Fairfield

2030 AM with High Level Bridge
blue=number lanes
green=v/c

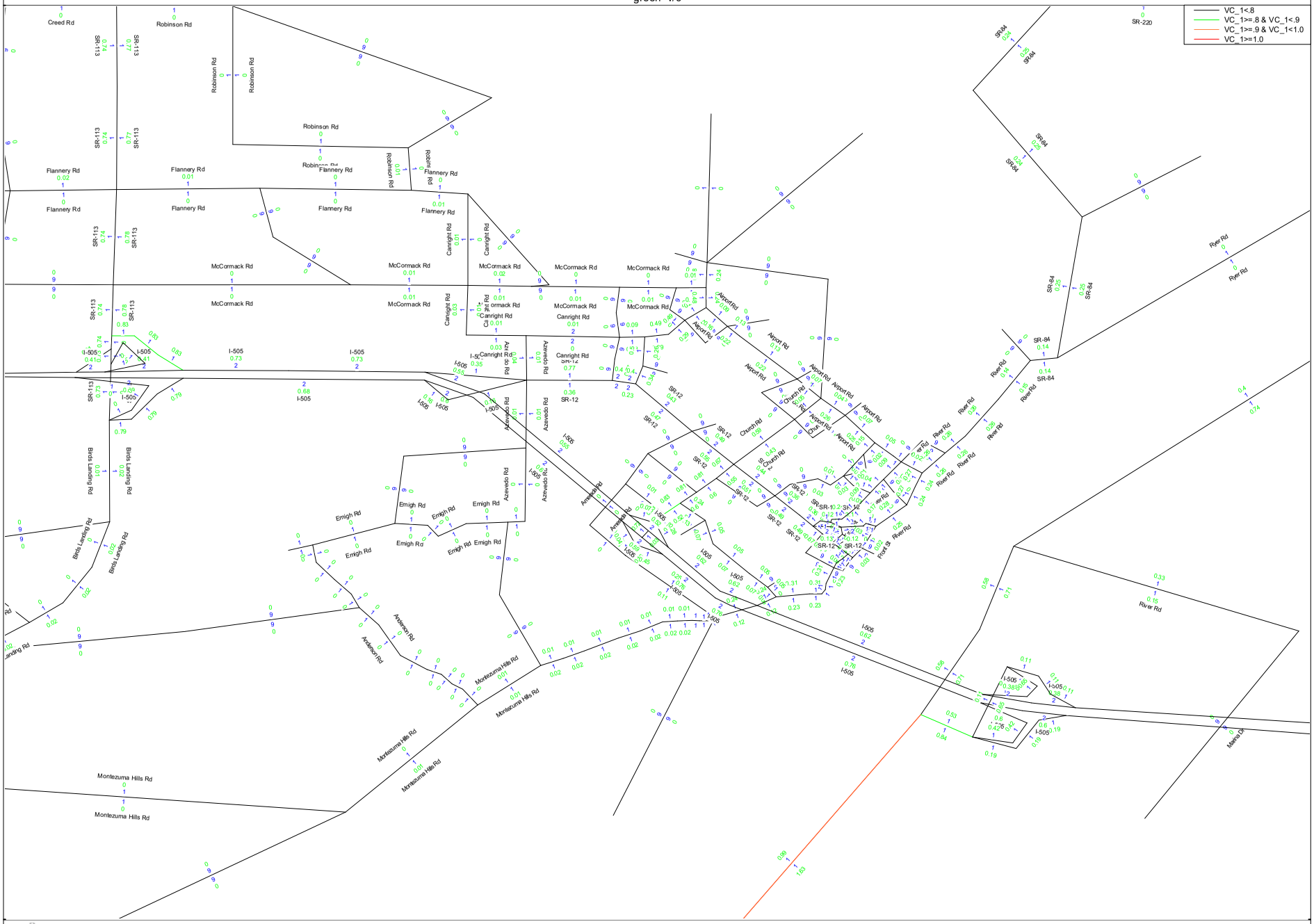

Licensed to City of Fairfield

2030 AM with High Level Bridge
blue=number lanes
green=v/c

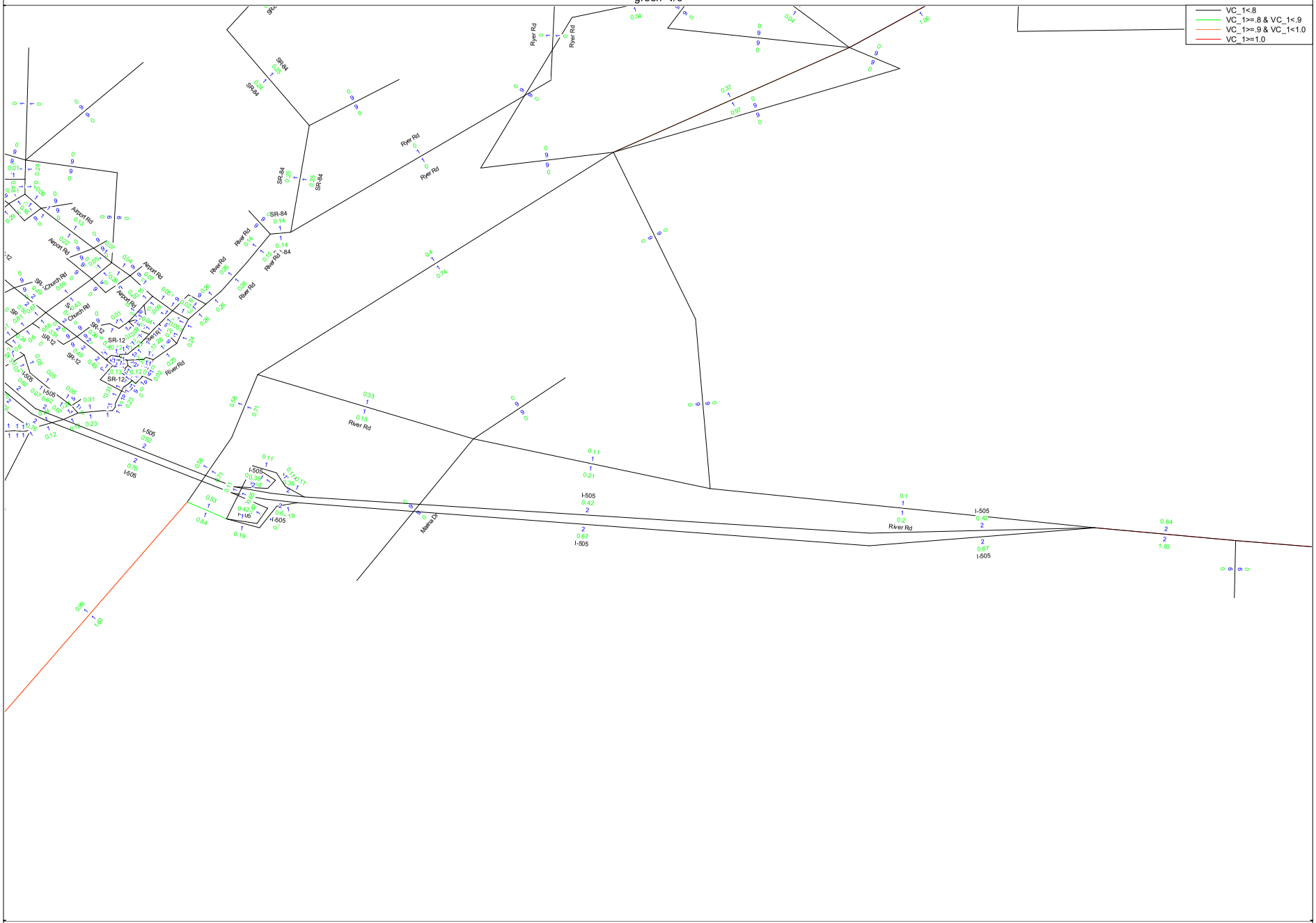

Licensed to City of Fairfield

2030 AM with High Level Bridge
blue=number lanes
green=v/c

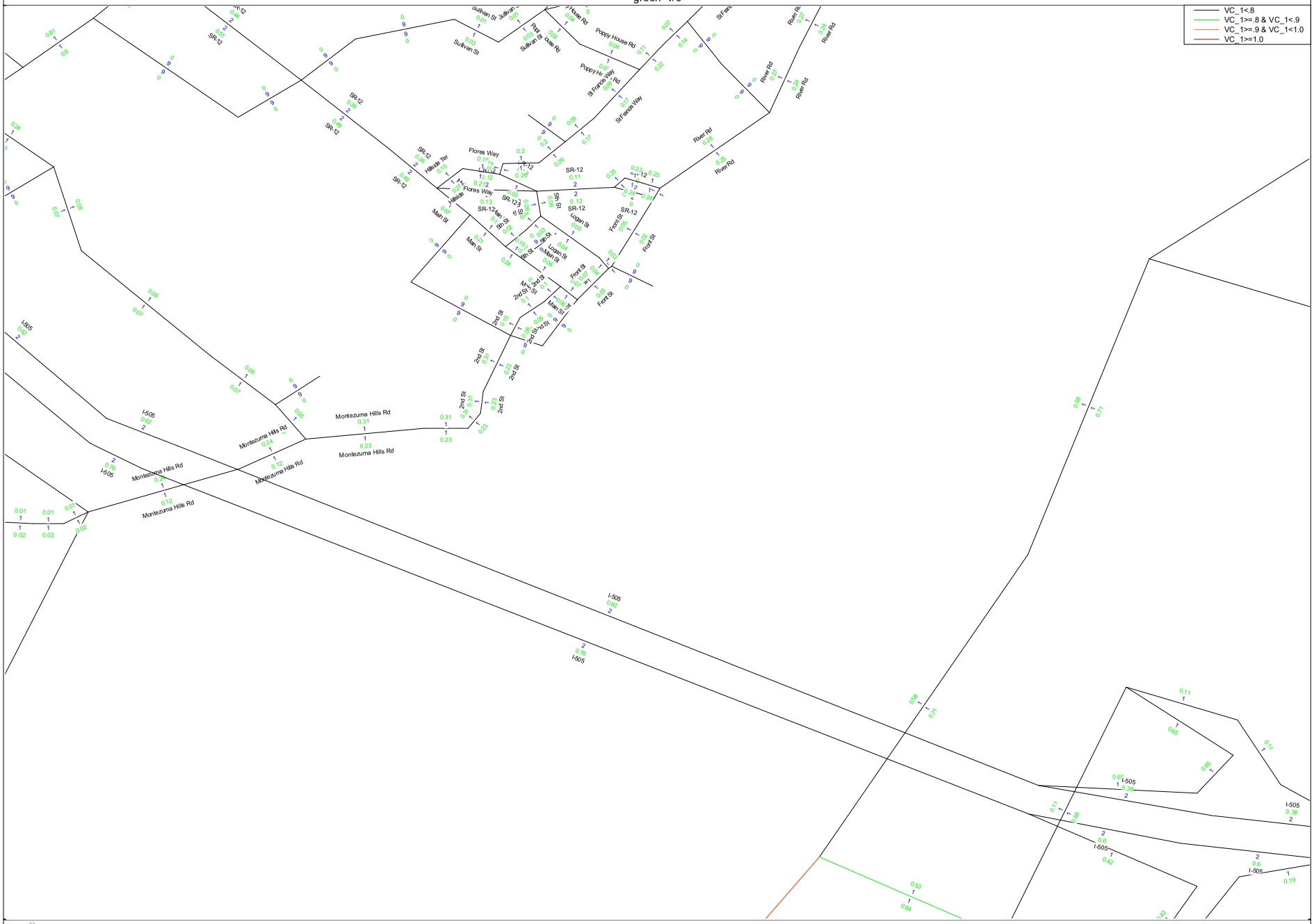

Licensed to City of Fairfield

2030 AM with High Level Bridge
blue=volume
green=capacity

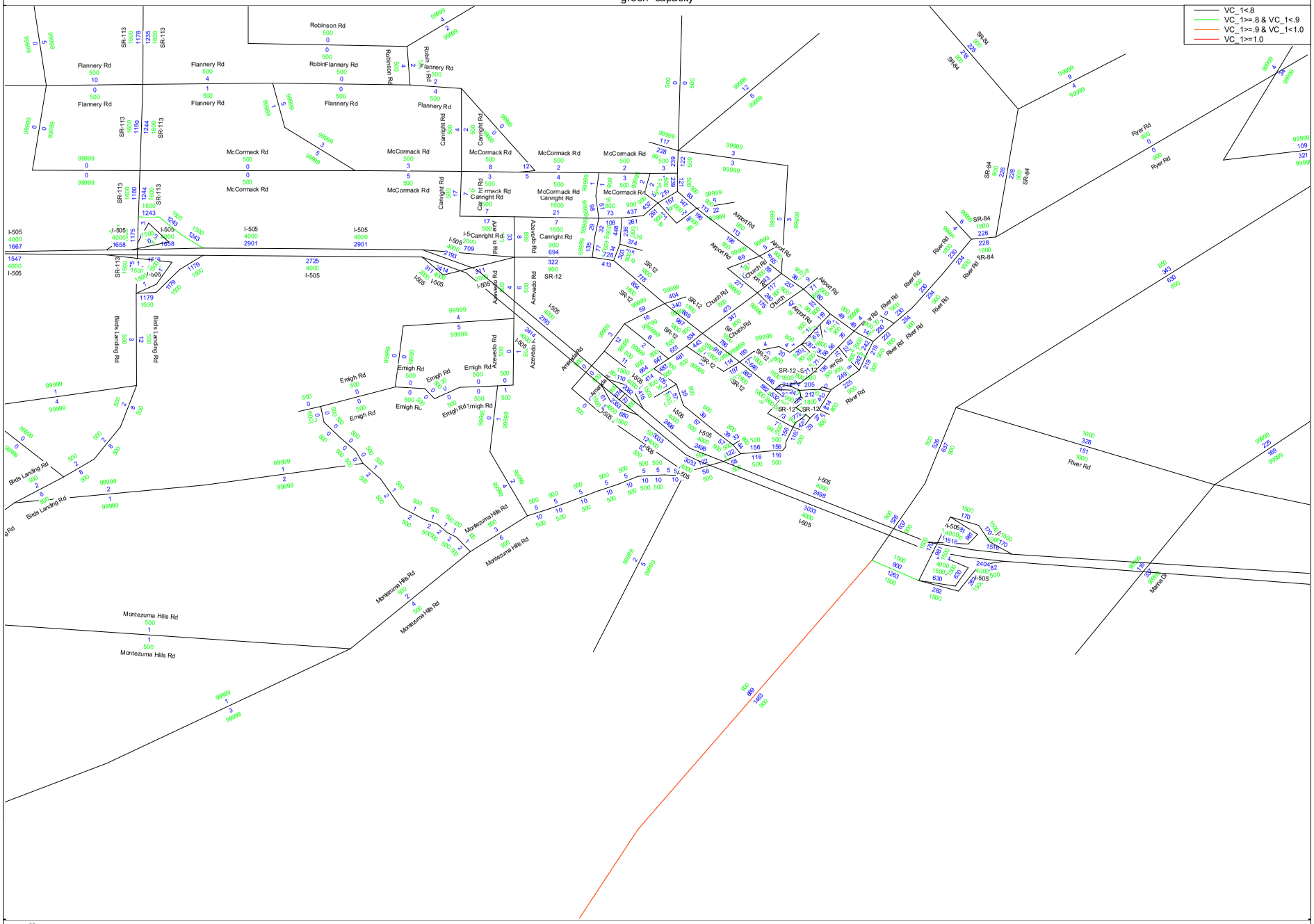

Licensed to City of Fairfield

2030 AM with High Level Bridge
blue=volume
green=capacity

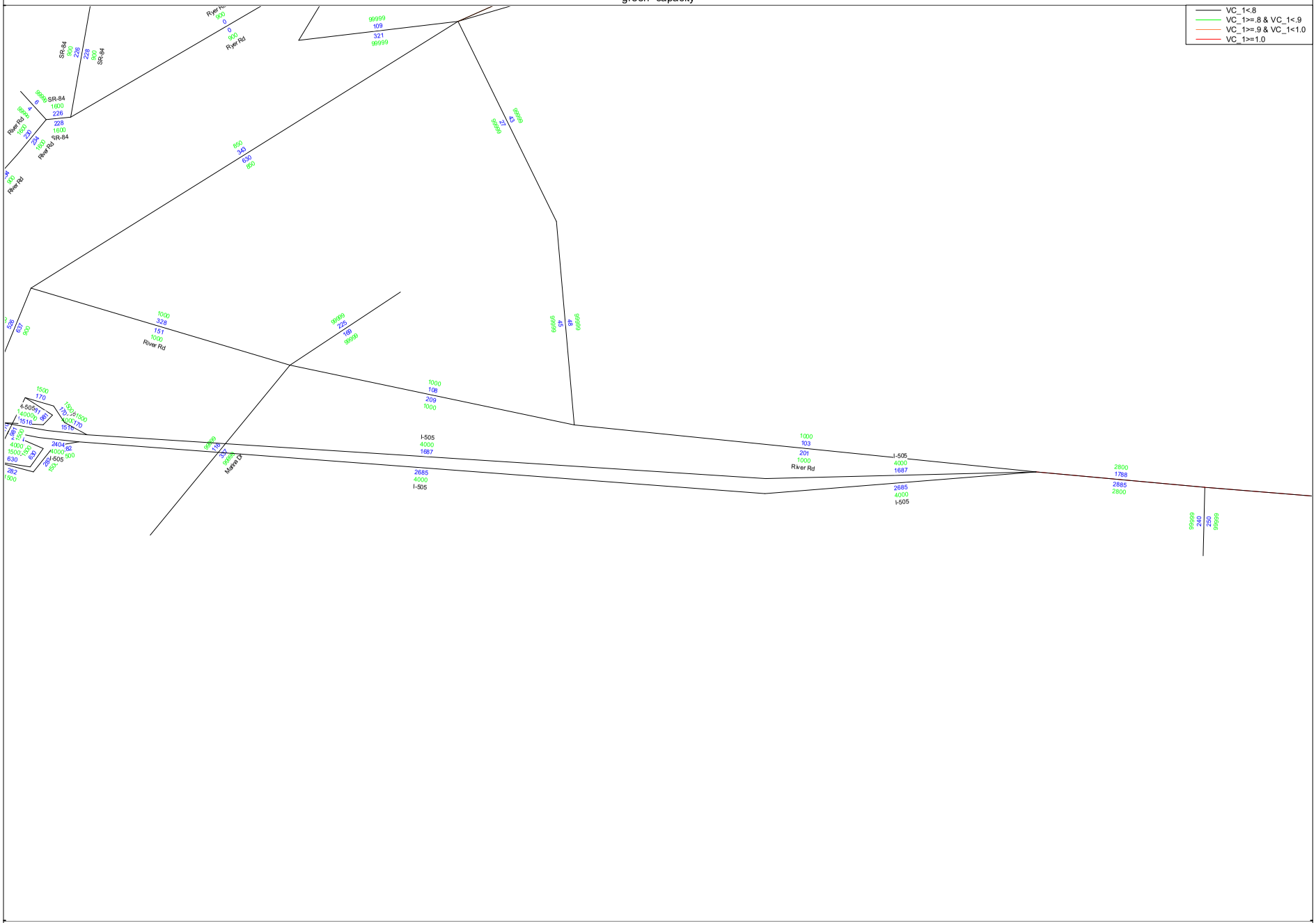

Licensed to City of Fairfield

2030 AM with High Level Bridge
blue=volume
green=capacity

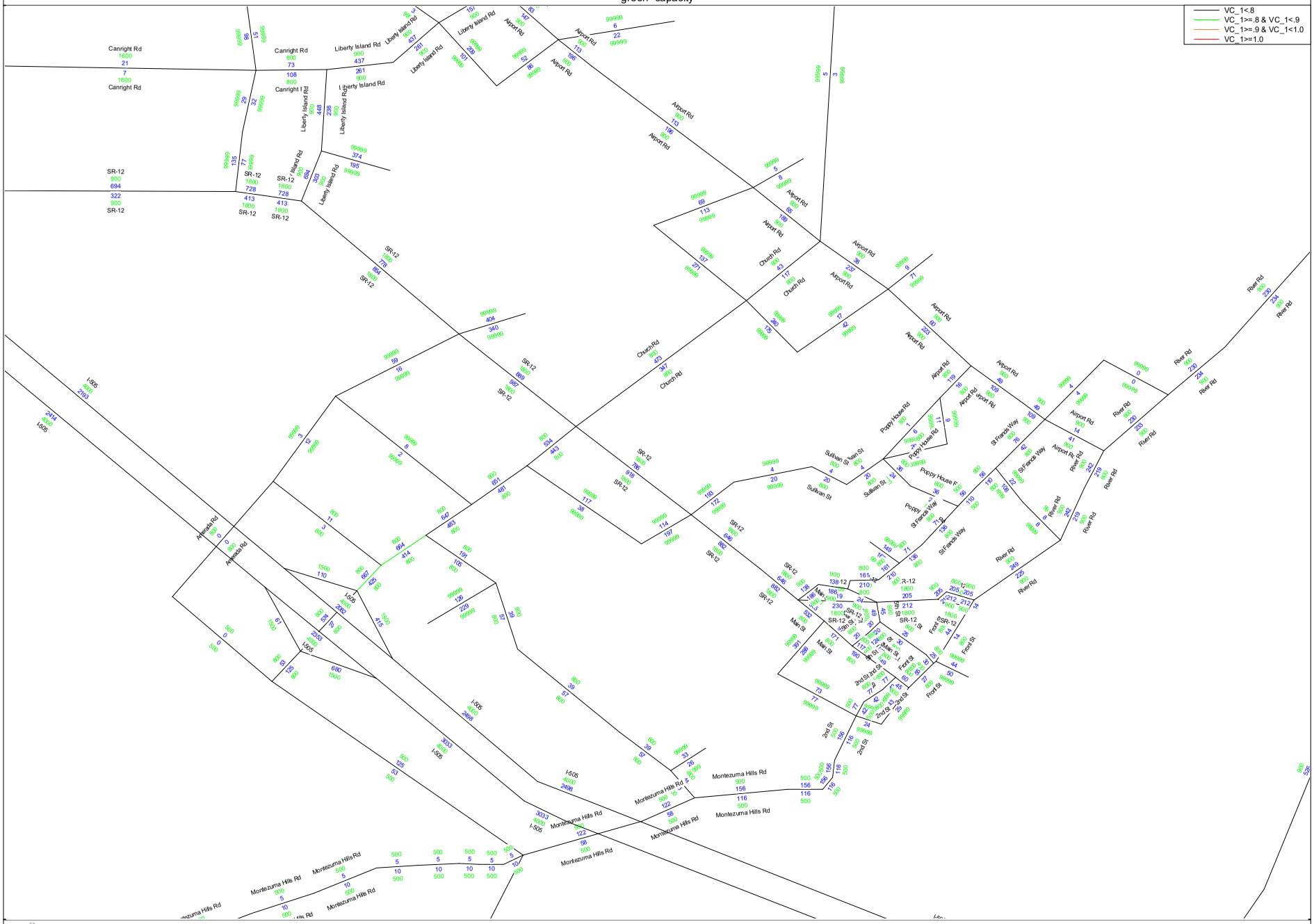

Licensed to City of Fairfield

2030 PM with High Level Bridge
blue=number lanes
green=v/c

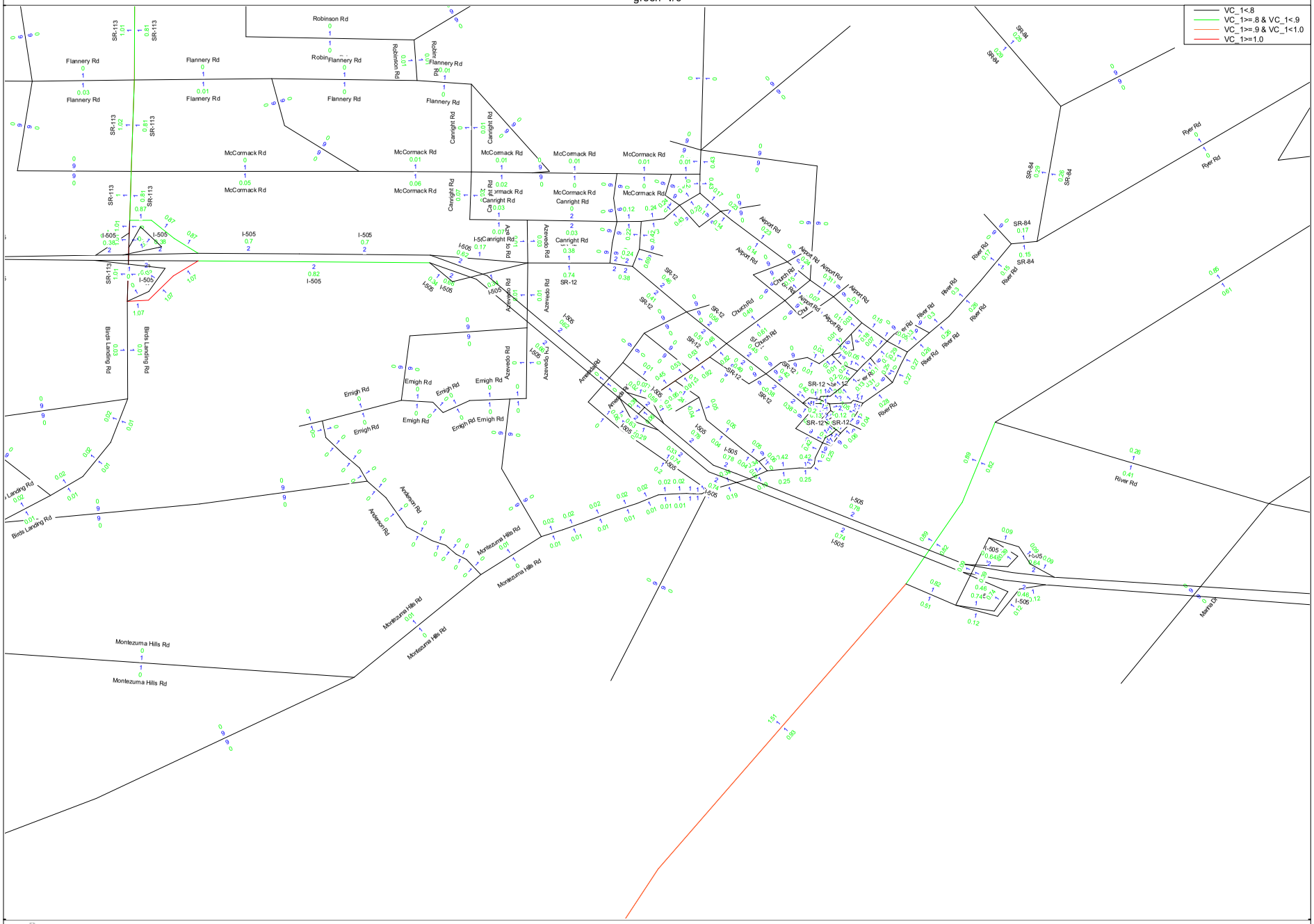

Licensed to City of Fairfield

2030 PM with High Level Bridge
blue=number lanes
green=v/c

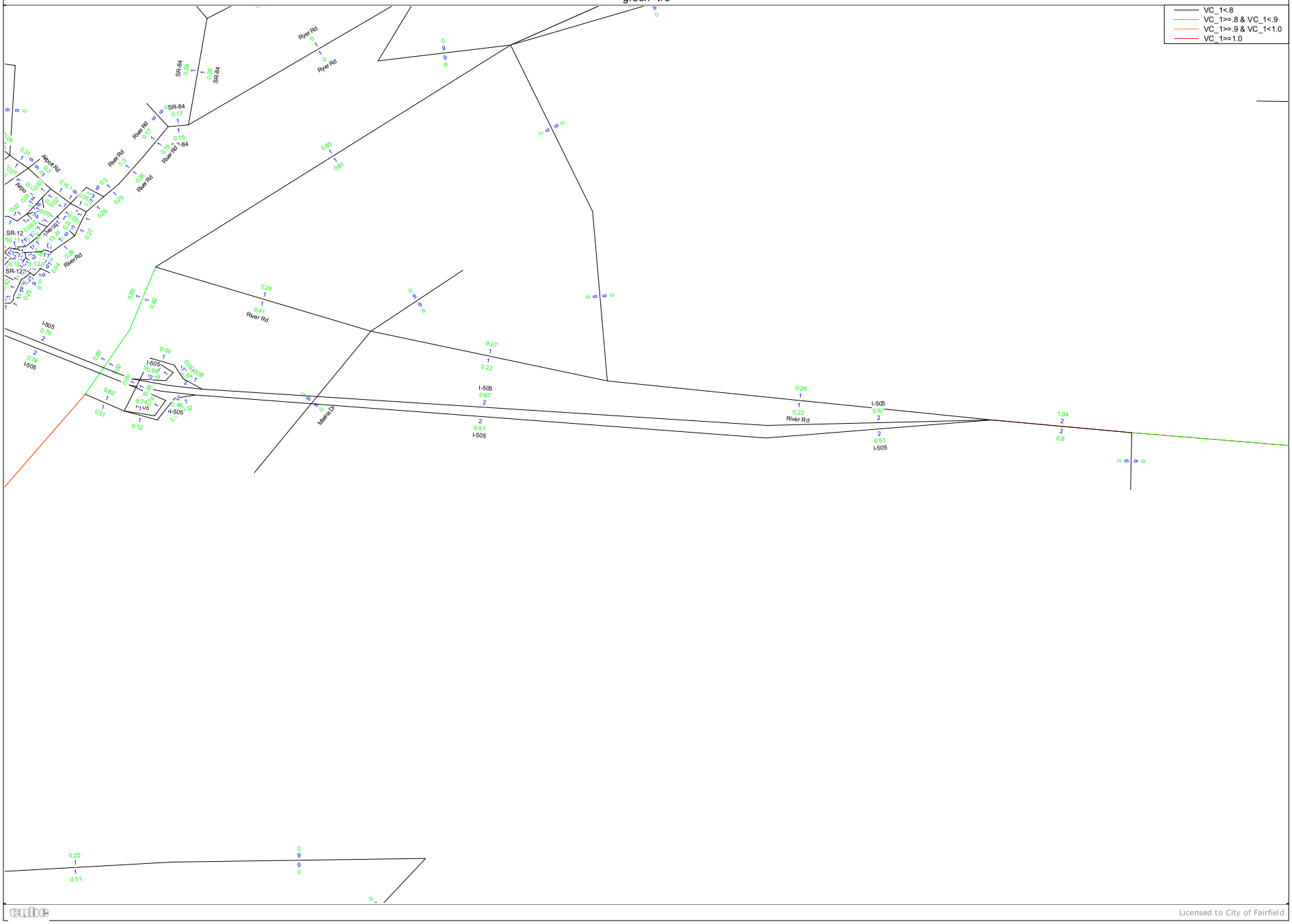

2030 PM with High Level Bridge
blue=number lanes
green=v/c

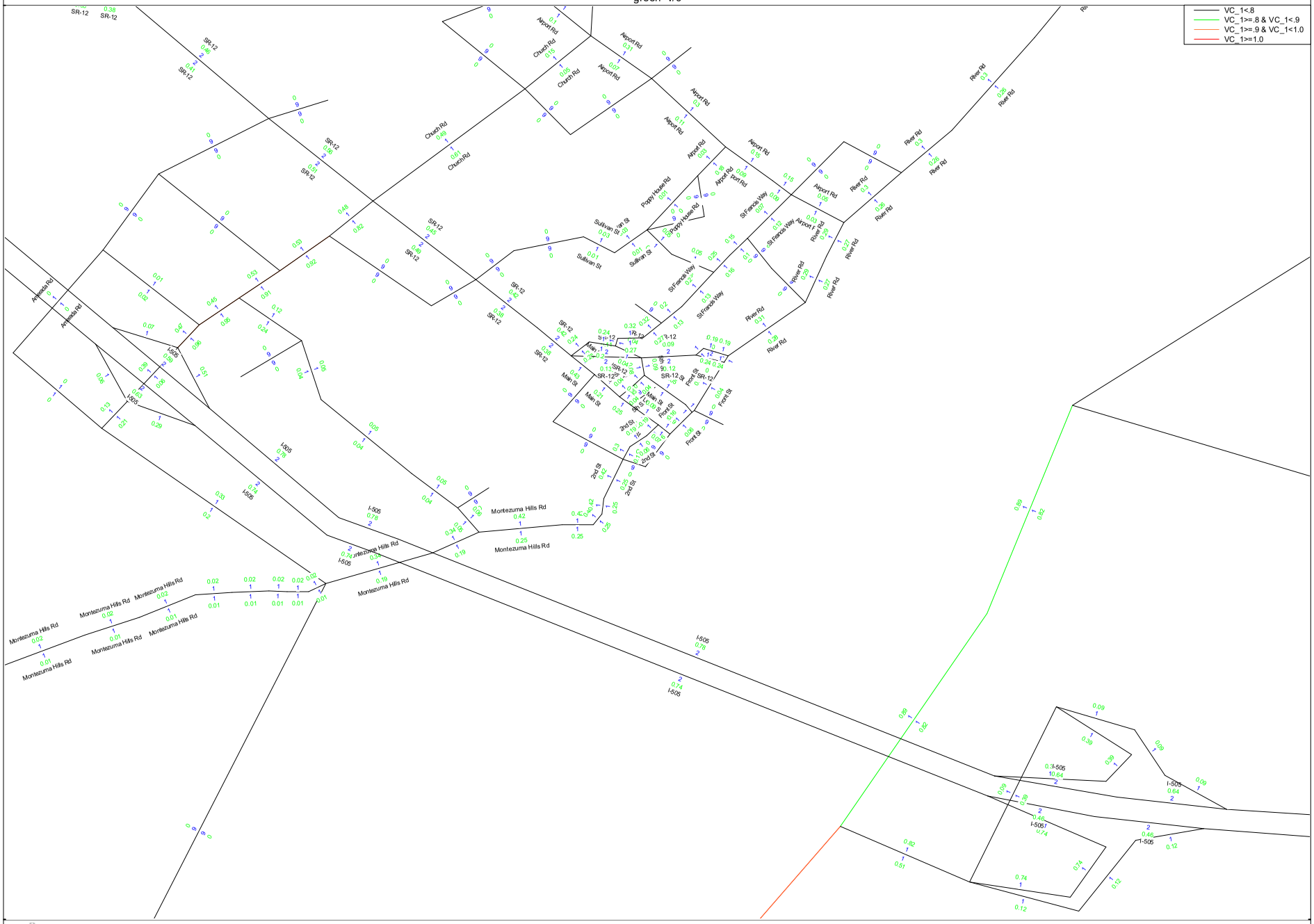

Licensed to City of Fairfield

2030 PM with High Level Bridge
blue=volume
green=capacity

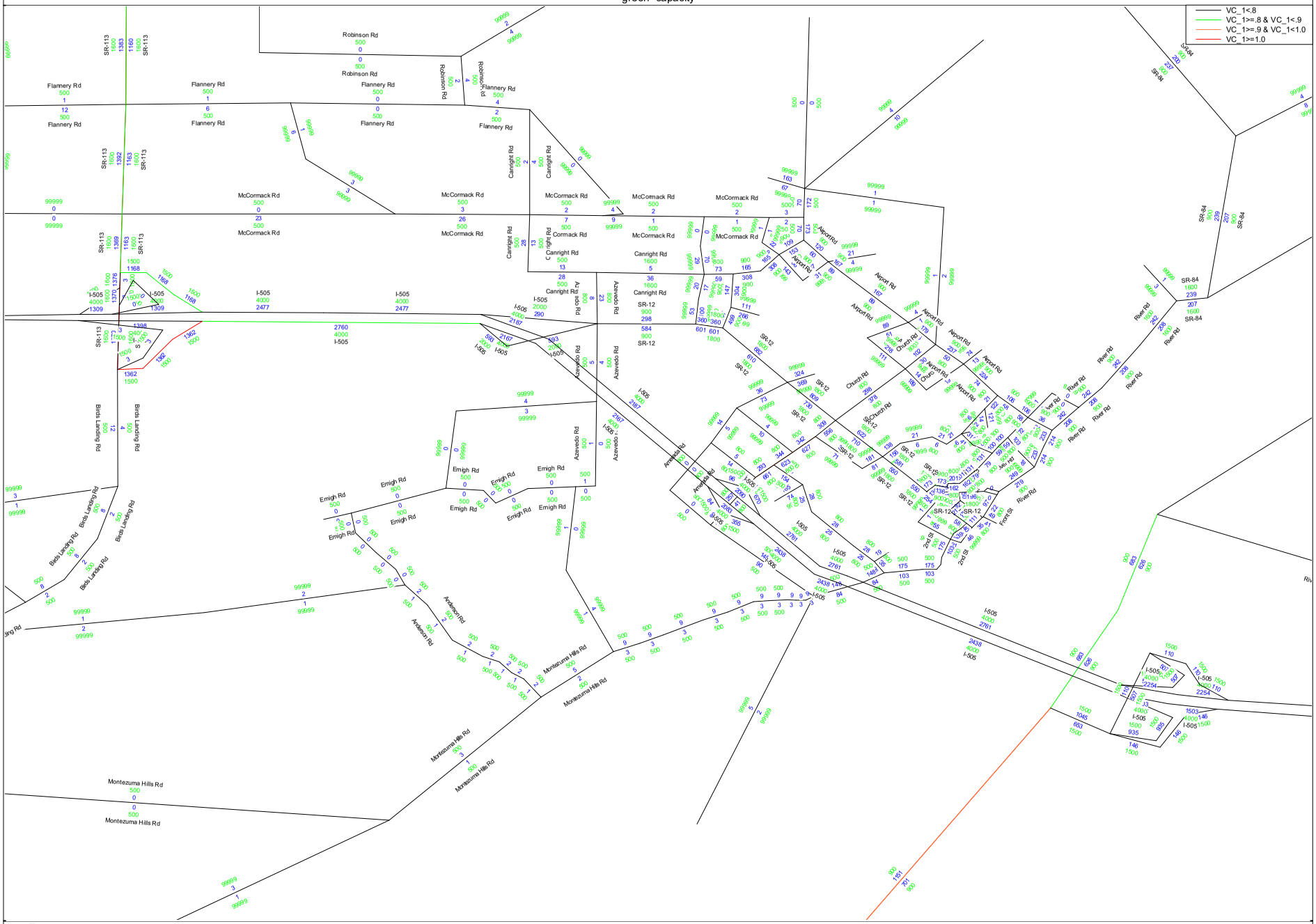

Licensed to City of Fairfield

2030 PM with High Level Bridge
blue=volume
green=capacity

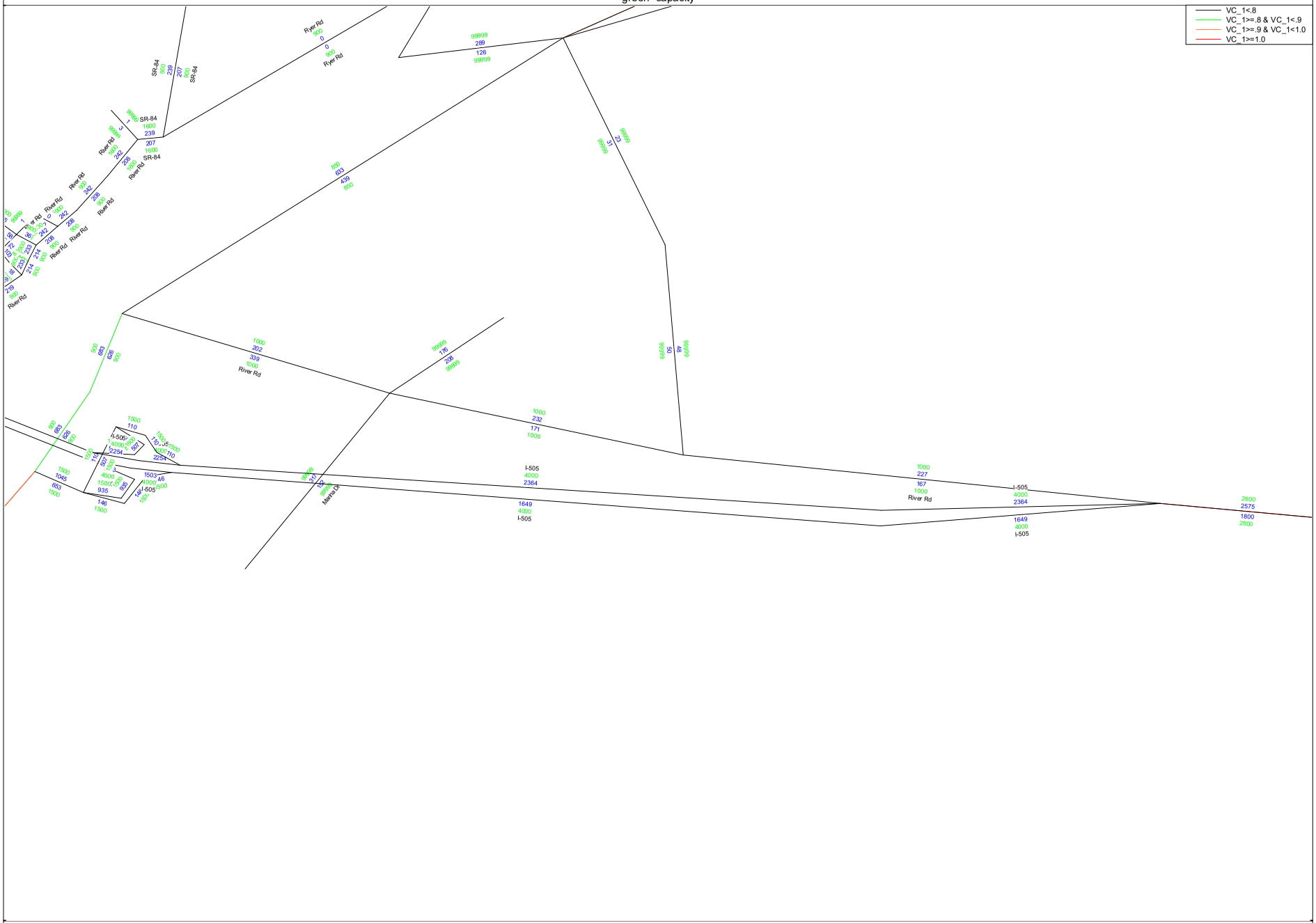

Licensed to City of Fairfield

2030 PM with High Level Bridge
blue=volume
green=capacity

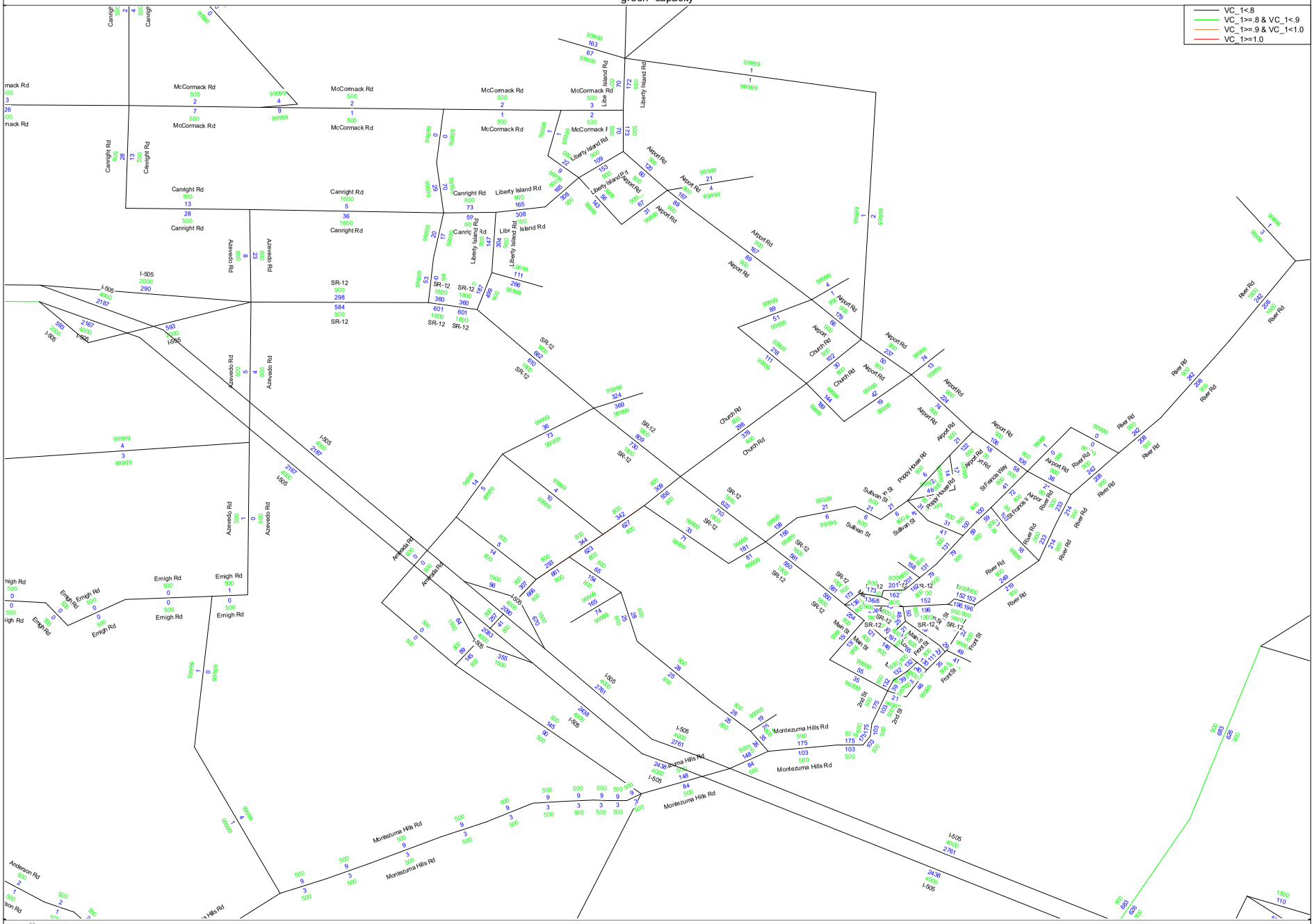

Licensed to City of Fairfield

With Toll Delay	2030 No Project		2030 Mid Level Bridge		2030 High Level Bridge	
	AM	PM	AM	PM	AM	PM
State Route 113 State Route 12	F 141	F 138.8	B 19.1	D 41.5	N/A	N/A
State Route 113 State Route 12 EB Ramps	N/A	N/A	N/A	N/A	A 8.5	A 7.8
State Route 113 State Route 12 WB Ramps	N/A	N/A	N/A	N/A	B 4.5	B 19.3
Summerfield State Route 12	B 14.6	C 23.1	C 29.3	C 31.6	N/A	N/A
Church St State Route 12	F 128.7	F 173.9	D 35.7	D 37.8	N/A	N/A
Church St State Route 12 EB Ramps	N/A	N/A	N/A	N/A	A 5.1	A 5.7
Church St State Route 12 EB Ramps	N/A	N/A	N/A	N/A	A 5.8	A 3.3
Main St State Route 12	F 83.2	F 158.5	D 37.6	C 33	N/A	N/A
Riverfront State Route 12 EB Ramps	N/A	N/A	B 12.4	B 14.6	N/A	N/A
State Route 160 State Route 12	F 1.34	F 120.7	N/A	N/A	N/A	N/A
State Route 160 State Route 12 WB	N/A	N/A	C 25.3	D 38.1	N/A	N/A
State Route 160 State Route 12 EB Ramps	N/A	N/A	D 41.7	C 30.4	N/A	N/A
State Route 160 State Route 12 Ramps	N/A	N/A	N/A	N/A	C 28.8	D 40.9

2030 No Project AM

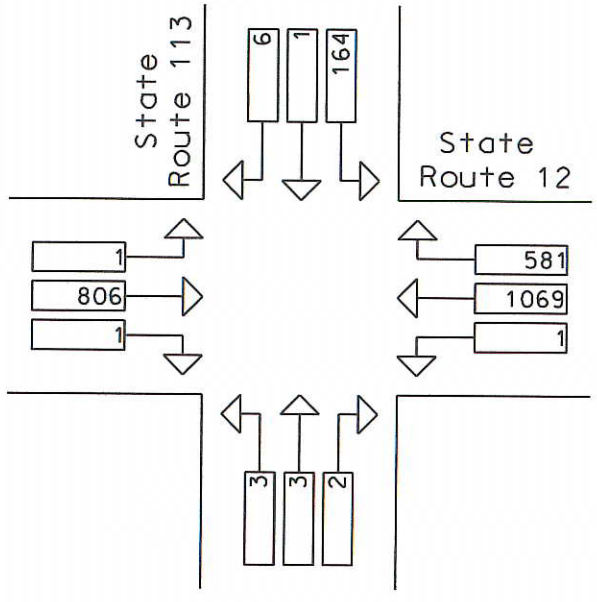

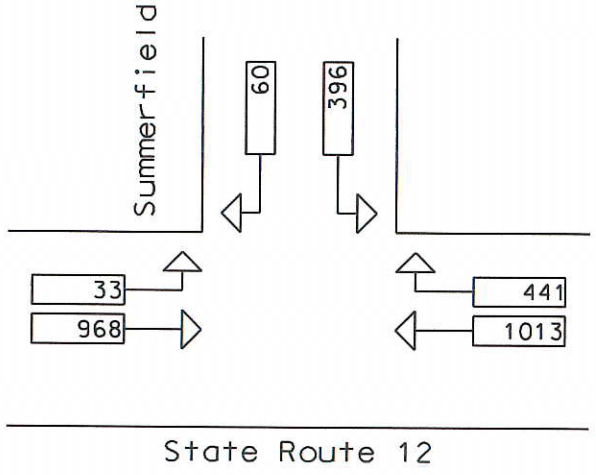

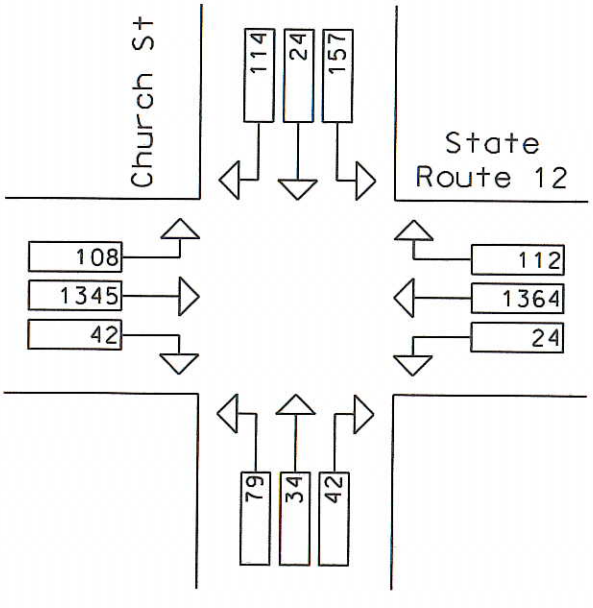

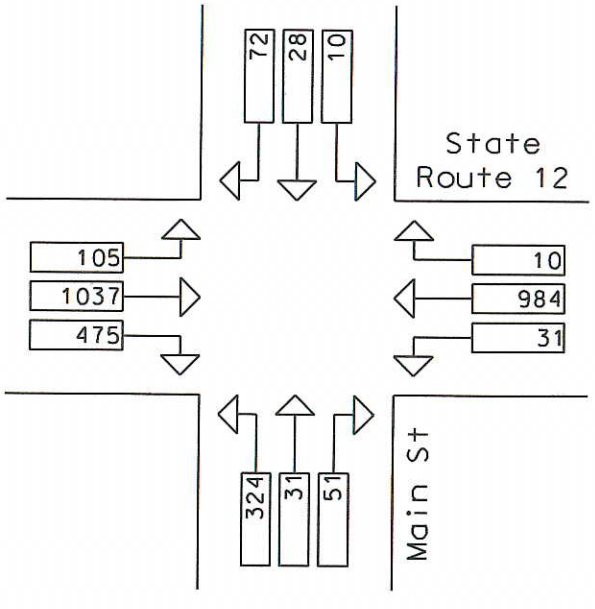

2030 No Project AM

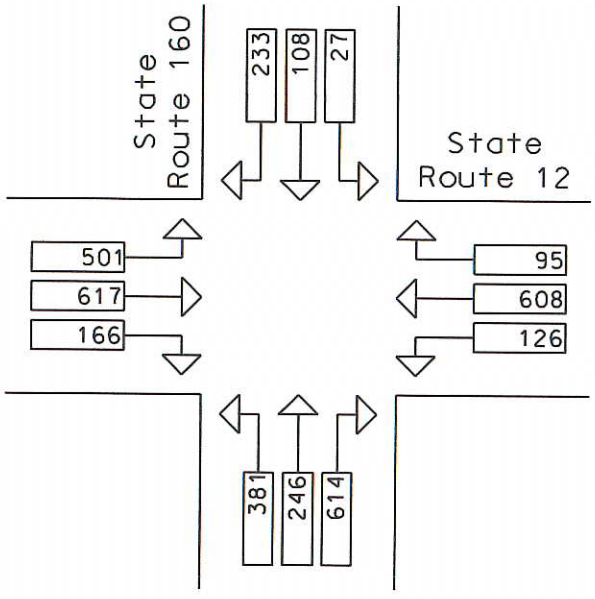

2030 No Project PM

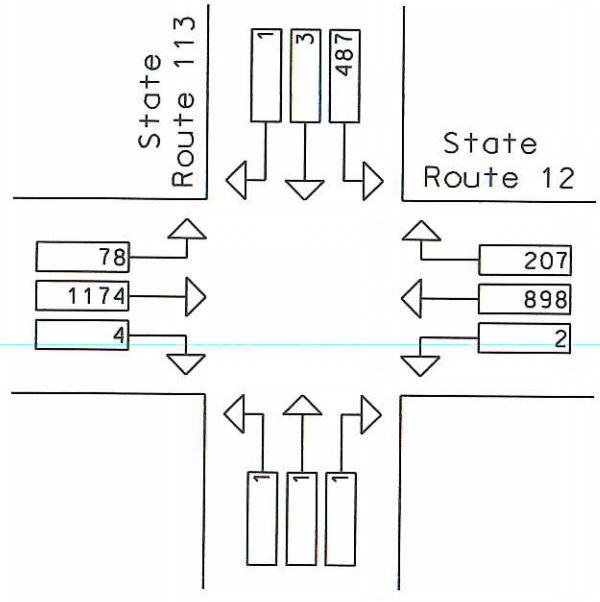

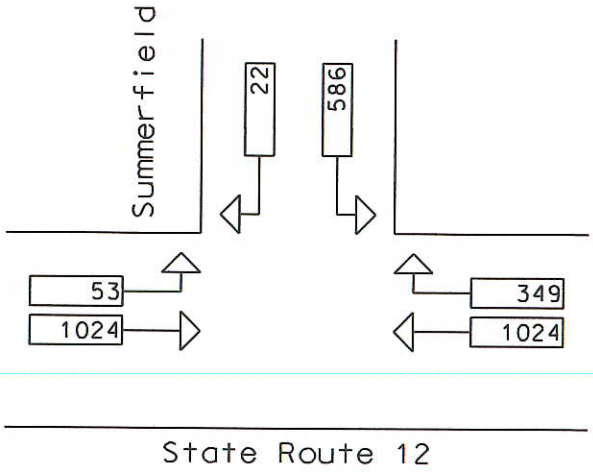

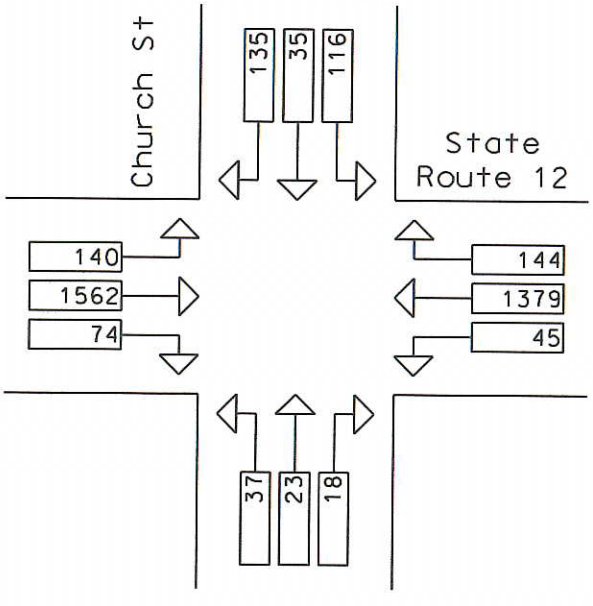

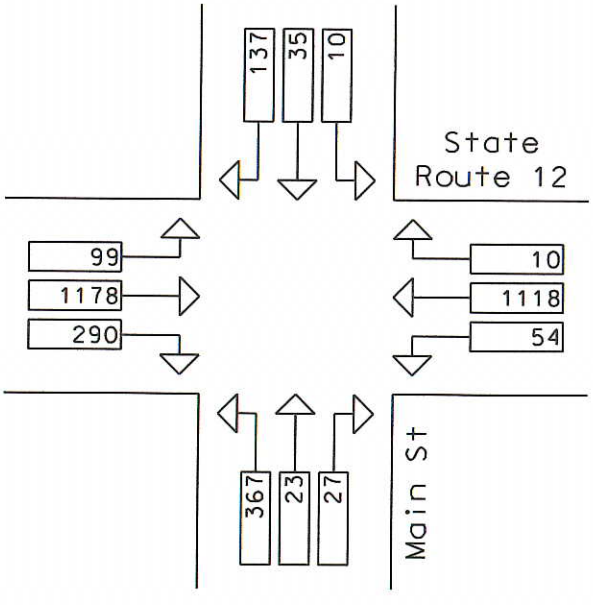

2030 No Project PM

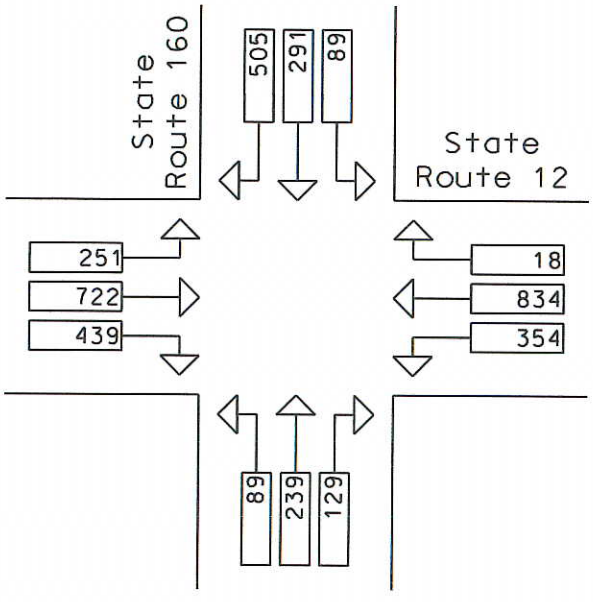

Movement	EBL	EBT	EBR	WBL	WBT	WBR	NBL	NBT	NBR	SBL	SBT	SBR
Lane Configurations												
Ideal Flow (vphpl)	1900	1900	1900	1900	1900	1900	1900	1900	1900	1900	1900	1900
Total Lost time (s)	4.0	4.0		4.0	4.0		4.0	4.0		4.0	4.0	4.0
Lane Util. Factor	1.00	1.00		1.00	1.00		1.00	1.00		1.00	1.00	1.00
Frt	1.00	1.00		1.00	0.95		1.00	0.94		1.00	1.00	0.85
Flt Protected	0.95	1.00		0.95	1.00		0.95	1.00		0.95	1.00	1.00
Satd. Flow (prot)	1770	1862		1770	1764		1770	1751		1770	1863	1583
Flt Permitted	0.95	1.00		0.95	1.00		0.95	1.00		0.95	1.00	1.00
Satd. Flow (perm)	1770	1862		1770	1764		1770	1751		1770	1863	1583
Volume (vph)	1	806	1	1	1069	581	3	3	2	164	1	6
Peak-hour factor, PHF	0.92	0.92	0.92	0.92	0.92	0.92	0.92	0.92	0.92	0.92	0.92	0.92
Adj. Flow (vph)	1	876	1	1	1162	632	3	3	2	178	1	7
Lane Group Flow (vph)	1	877	0	1	1794	0	3	5	0	178	1	7
Turn Type	Prot			Prot			Prot			Prot		Perm
Protected Phases	7	4		3	8		5	2		1	6	
Permitted Phases												6
Actuated Green, G (s)	0.8	102.1		0.8	102.1		0.8	9.2		11.0	19.4	19.4
Effective Green, g (s)	0.8	102.1		0.8	102.1		0.8	9.2		11.0	19.4	19.4
Actuated g/C Ratio	0.01	0.73		0.01	0.73		0.01	0.07		0.08	0.14	0.14
Clearance Time (s)	4.0	4.0		4.0	4.0		4.0	4.0		4.0	4.0	4.0
Vehicle Extension (s)	3.0	3.0		3.0	3.0		3.0	3.0		3.0	3.0	3.0
Lane Grp Cap (vph)	10	1367		10	1295		10	116		140	260	221
v/s Ratio Prot	c0.00	0.47		0.00	c1.02		0.00	c0.00		c0.10	0.00	
v/s Ratio Perm												0.00
v/c Ratio	0.10	0.64		0.10	1.39		0.30	0.04		1.27	0.00	0.03
Uniform Delay, d1	68.8	9.3		68.8	18.5		68.9	60.8		64.0	51.5	51.7
Progression Factor	1.00	1.00		1.00	1.00		1.00	1.00		1.00	1.00	1.00
Incremental Delay, d2	4.4	1.0		4.4	178.3		16.1	0.2		166.4	0.0	0.1
Delay (s)	73.1	10.3		73.1	196.8		85.0	61.0		230.4	51.5	51.8
Level of Service	E	B		E	F		F	E		F	D	D
Approach Delay (s)		10.4			196.7			70.0			222.7	
Approach LOS		B			F			E			F	

Intersection Summary			
HCM Average Control Delay	141.0	HCM Level of Service	F
HCM Volume to Capacity ratio	1.27		
Actuated Cycle Length (s)	139.1	Sum of lost time (s)	16.0
Intersection Capacity Utilization	122.9%	ICU Level of Service	H

c Critical Lane Group

Movement	EBL	EBT	WBT	WBR	SBL	SBR
Lane Configurations						
Ideal Flow (vphpl)	1900	1900	1900	1900	1900	1900
Total Lost time (s)	4.0	4.0	4.0	4.0	4.0	4.0
Lane Util. Factor	1.00	0.95	0.95	1.00	1.00	1.00
Frt	1.00	1.00	1.00	0.85	1.00	0.85
Flt Protected	0.95	1.00	1.00	1.00	0.95	1.00
Satd. Flow (prot)	1770	3539	3539	1583	1770	1583
Flt Permitted	0.95	1.00	1.00	1.00	0.95	1.00
Satd. Flow (perm)	1770	3539	3539	1583	1770	1583
Volume (vph)	33	968	1013	441	396	60
Peak-hour factor, PHF	0.92	0.92	0.92	0.92	0.92	0.92
Adj. Flow (vph)	36	1052	1101	479	430	65
Lane Group Flow (vph)	36	1052	1101	479	430	65
Turn Type	Prot			Perm		Perm
Protected Phases	7	4	8		1	
Permitted Phases				8		1
Actuated Green, G (s)	1.2	24.9	19.7	19.7	15.4	15.4
Effective Green, g (s)	1.2	24.9	19.7	19.7	15.4	15.4
Actuated g/C Ratio	0.02	0.52	0.41	0.41	0.32	0.32
Clearance Time (s)	4.0	4.0	4.0	4.0	4.0	4.0
Vehicle Extension (s)	3.0	3.0	3.0	3.0	3.0	3.0
Lane Grp Cap (vph)	44	1824	1443	646	564	505
v/s Ratio Prot	0.02	c0.30	c0.31		c0.24	
v/s Ratio Perm				0.30		0.04
v/c Ratio	0.82	0.58	0.76	0.74	0.76	0.13
Uniform Delay, d1	23.4	8.1	12.3	12.1	14.8	11.7
Progression Factor	1.00	1.00	1.00	1.00	1.00	1.00
Incremental Delay, d2	69.3	0.4	2.4	4.6	6.0	0.1
Delay (s)	92.8	8.5	14.7	16.7	20.9	11.8
Level of Service	F	A	B	B	C	B
Approach Delay (s)		11.3	15.3		19.7	
Approach LOS		B	B		B	

Intersection Summary			
HCM Average Control Delay	14.6	HCM Level of Service	B
HCM Volume to Capacity ratio	0.78		
Actuated Cycle Length (s)	48.3	Sum of lost time (s)	12.0
Intersection Capacity Utilization	61.0%	ICU Level of Service	B

c Critical Lane Group

Movement	EBL	EBT	EBR	WBL	WBT	WBR	NBL	NBT	NBR	SBL	SBT	SBR
Lane Configurations												
Ideal Flow (vphpl)	1900	1900	1900	1900	1900	1900	1900	1900	1900	1900	1900	1900
Total Lost time (s)	4.0	4.0		4.0	4.0		4.0	4.0		4.0	4.0	
Lane Util. Factor	1.00	1.00		1.00	1.00		1.00	1.00		1.00	1.00	
Frt	1.00	1.00		1.00	0.99		1.00	0.92		1.00	0.88	
Flt Protected	0.95	1.00		0.95	1.00		0.95	1.00		0.95	1.00	
Satd. Flow (prot)	1770	1854		1770	1842		1770	1708		1770	1632	
Flt Permitted	0.95	1.00		0.95	1.00		0.95	1.00		0.95	1.00	
Satd. Flow (perm)	1770	1854		1770	1842		1770	1708		1770	1632	
Volume (vph)	108	1345	42	24	1364	112	79	34	42	157	24	114
Peak-hour factor, PHF	0.92	0.92	0.92	0.92	0.92	0.92	0.92	0.92	0.92	0.92	0.92	0.92
Adj. Flow (vph)	117	1462	46	26	1483	122	86	37	46	171	26	124
Lane Group Flow (vph)	117	1508	0	26	1605	0	86	83	0	171	150	0
Turn Type	Prot			Prot			Prot			Prot		
Protected Phases	7	4		3	8		5	2		1	6	
Permitted Phases												
Actuated Green, G (s)	8.0	104.3		2.4	98.7		9.6	9.9		12.0	12.3	
Effective Green, g (s)	8.0	104.3		2.4	98.7		9.6	9.9		12.0	12.3	
Actuated g/C Ratio	0.06	0.72		0.02	0.68		0.07	0.07		0.08	0.09	
Clearance Time (s)	4.0	4.0		4.0	4.0		4.0	4.0		4.0	4.0	
Vehicle Extension (s)	3.0	3.0		3.0	3.0		3.0	3.0		3.0	3.0	
Lane Grp Cap (vph)	98	1337		29	1257		118	117		147	139	
v/s Ratio Prot	c0.07	0.81		0.01	c0.87		0.05	0.05		c0.10	c0.09	
v/s Ratio Perm												
v/c Ratio	1.19	1.13		0.90	1.28		0.73	0.71		1.16	1.08	
Uniform Delay, d1	68.3	20.2		71.0	23.0		66.2	65.9		66.3	66.1	
Progression Factor	1.00	1.00		1.00	1.00		1.00	1.00		1.00	1.00	
Incremental Delay, d2	152.1	67.7		122.2	130.9		20.0	17.8		124.8	99.1	
Delay (s)	220.4	87.8		193.2	153.8		86.2	83.8		191.1	165.2	
Level of Service	F	F		F	F		F	F		F	F	
Approach Delay (s)		97.4			154.4			85.0			179.0	
Approach LOS		F			F			F			F	

Intersection Summary			
HCM Average Control Delay	128.7	HCM Level of Service	F
HCM Volume to Capacity ratio	1.22		
Actuated Cycle Length (s)	144.6	Sum of lost time (s)	12.0
Intersection Capacity Utilization	119.4%	ICU Level of Service	G
c Critical Lane Group			

Movement	EBL	EBT	EBR	WBL	WBT	WBR	NBL	NBT	NBR	SBL	SBT	SBR
Lane Configurations												
Ideal Flow (vphpl)	1900	1900	1900	1900	1900	1900	1900	1900	1900	1900	1900	1900
Total Lost time (s)	4.0	4.0	4.0	4.0	4.0	4.0		4.0			4.0	
Lane Util. Factor	1.00	1.00	1.00	1.00	1.00	1.00		1.00			1.00	
Frt	1.00	1.00	0.85	1.00	1.00	0.85		0.98			0.91	
Flt Protected	0.95	1.00	1.00	0.95	1.00	1.00		0.96			1.00	
Satd. Flow (prot)	1770	1863	1583	1770	1863	1583		1761			1690	
Flt Permitted	0.95	1.00	1.00	0.95	1.00	1.00		0.65			0.96	
Satd. Flow (perm)	1770	1863	1583	1770	1863	1583		1189			1622	
Volume (vph)	105	1037	475	31	984	10	324	31	51	10	28	72
Peak-hour factor, PHF	0.92	0.92	0.92	0.92	0.92	0.92	0.92	0.92	0.92	0.92	0.92	0.92
Adj. Flow (vph)	114	1127	516	34	1070	11	352	34	55	11	30	78
Lane Group Flow (vph)	114	1127	516	34	1070	11	0	441	0	0	119	0
Turn Type	Prot		Perm	Prot		Perm	Perm			Perm		
Protected Phases	7	4		3	8			2			6	
Permitted Phases			4			8	2			6		
Actuated Green, G (s)	9.0	79.6	79.6	3.2	73.8	73.8		46.0			46.0	
Effective Green, g (s)	9.0	79.6	79.6	3.2	73.8	73.8		46.0			46.0	
Actuated g/C Ratio	0.06	0.57	0.57	0.02	0.52	0.52		0.33			0.33	
Clearance Time (s)	4.0	4.0	4.0	4.0	4.0	4.0		4.0			4.0	
Vehicle Extension (s)	3.0	3.0	3.0	3.0	3.0	3.0		3.0			3.0	
Lane Grp Cap (vph)	113	1053	895	40	976	830		388			530	
v/s Ratio Prot	c0.06	c0.61		0.02	0.57							
v/s Ratio Perm			0.33			0.01		c0.37			0.07	
v/c Ratio	1.01	1.07	0.58	0.85	1.10	0.01		1.14			0.22	
Uniform Delay, d1	65.9	30.6	19.7	68.6	33.5	16.1		47.4			34.4	
Progression Factor	1.00	1.00	1.00	1.00	1.00	1.00		1.00			1.00	
Incremental Delay, d2	87.1	48.6	0.9	85.5	58.8	0.0		88.3			0.2	
Delay (s)	153.0	79.2	20.6	154.1	92.3	16.1		135.7			34.7	
Level of Service	F	E	C	F	F	B		F			C	
Approach Delay (s)		66.8			93.4			135.7			34.7	
Approach LOS		E			F			F			C	

Intersection Summary			
HCM Average Control Delay	83.2	HCM Level of Service	F
HCM Volume to Capacity ratio	1.08		
Actuated Cycle Length (s)	140.8	Sum of lost time (s)	8.0
Intersection Capacity Utilization	104.0%	ICU Level of Service	F

c Critical Lane Group

Movement	EBL	EBT	EBR	WBL	WBT	WBR	NBL	NBT	NBR	SBL	SBT	SBR
Lane Configurations												
Ideal Flow (vphpl)	1900	1900	1900	1900	1900	1900	1900	1900	1900	1900	1900	1900
Total Lost time (s)	4.0	4.0	4.0	4.0	4.0	4.0	4.0	4.0	4.0	4.0	4.0	4.0
Lane Util. Factor	1.00	1.00	1.00	1.00	1.00	1.00	1.00	1.00	1.00	1.00	1.00	1.00
Frt	1.00	1.00	0.85	1.00	1.00	0.85	1.00	1.00	0.85	1.00	1.00	0.85
Flt Protected	0.95	1.00	1.00	0.95	1.00	1.00	0.95	1.00	1.00	0.95	1.00	1.00
Satd. Flow (prot)	1770	1863	1583	1770	1863	1583	1770	1863	1583	1770	1863	1583
Flt Permitted	0.95	1.00	1.00	0.95	1.00	1.00	0.95	1.00	1.00	0.95	1.00	1.00
Satd. Flow (perm)	1770	1863	1583	1770	1863	1583	1770	1863	1583	1770	1863	1583
Volume (vph)	501	617	166	126	608	95	381	246	614	27	108	233
Peak-hour factor, PHF	0.92	0.92	0.92	0.92	0.92	0.92	0.92	0.92	0.92	0.92	0.92	0.92
Adj. Flow (vph)	545	671	180	137	661	103	414	267	667	29	117	253
Lane Group Flow (vph)	545	671	180	137	661	103	414	267	667	29	117	253
Turn Type	Prot		Perm	Prot		Perm	Prot		Perm	Prot		Perm
Protected Phases	7	4		3	8		5	2		1	6	
Permitted Phases			4			8			2			6
Actuated Green, G (s)	40.0	71.9	71.9	14.1	46.0	46.0	30.0	43.8	43.8	3.2	17.0	17.0
Effective Green, g (s)	40.0	71.9	71.9	14.1	46.0	46.0	30.0	43.8	43.8	3.2	17.0	17.0
Actuated g/C Ratio	0.27	0.48	0.48	0.09	0.31	0.31	0.20	0.29	0.29	0.02	0.11	0.11
Clearance Time (s)	4.0	4.0	4.0	4.0	4.0	4.0	4.0	4.0	4.0	4.0	4.0	4.0
Vehicle Extension (s)	3.0	3.0	3.0	3.0	3.0	3.0	3.0	3.0	3.0	3.0	3.0	3.0
Lane Grp Cap (vph)	475	899	764	167	575	489	356	548	465	38	213	181
v/s Ratio Prot	c0.31	0.36		0.08	c0.35		c0.23	0.14		0.02	0.06	
v/s Ratio Perm			0.11			0.07			c0.42			0.16
v/c Ratio	1.15	0.75	0.24	0.82	1.15	0.21	1.16	0.49	1.43	0.76	0.55	1.40
Uniform Delay, d1	54.5	31.2	22.5	66.2	51.5	38.1	59.5	43.3	52.6	72.5	62.4	66.0
Progression Factor	1.00	1.00	1.00	1.00	1.00	1.00	1.00	1.00	1.00	1.00	1.00	1.00
Incremental Delay, d2	88.4	3.4	0.2	26.4	86.1	0.2	99.8	0.7	207.5	60.7	2.9	208.9
Delay (s)	142.9	34.6	22.7	92.6	137.6	38.3	159.3	44.0	260.1	133.2	65.3	274.9
Level of Service	F	C	C	F	F	D	F	D	F	F	E	F
Approach Delay (s)		75.4			119.4			186.4			203.2	
Approach LOS		E			F			F			F	

Intersection Summary			
HCM Average Control Delay	134.8	HCM Level of Service	F
HCM Volume to Capacity ratio	1.26		
Actuated Cycle Length (s)	149.0	Sum of lost time (s)	16.0
Intersection Capacity Utilization	104.6%	ICU Level of Service	F
c Critical Lane Group			

Movement	EBL	EBT	EBR	WBL	WBT	WBR	NBL	NBT	NBR	SBL	SBT	SBR
Lane Configurations												
Ideal Flow (vphpl)	1900	1900	1900	1900	1900	1900	1900	1900	1900	1900	1900	1900
Total Lost time (s)	4.0	4.0		4.0	4.0		4.0	4.0		4.0	4.0	4.0
Lane Util. Factor	1.00	1.00		1.00	1.00		1.00	1.00		1.00	1.00	1.00
Frt	1.00	1.00		1.00	0.97		1.00	0.92		1.00	1.00	0.85
Flt Protected	0.95	1.00		0.95	1.00		0.95	1.00		0.95	1.00	1.00
Satd. Flow (prot)	1770	1862		1770	1810		1770	1723		1770	1863	1583
Flt Permitted	0.95	1.00		0.95	1.00		0.95	1.00		0.95	1.00	1.00
Satd. Flow (perm)	1770	1862		1770	1810		1770	1723		1770	1863	1583
Volume (vph)	78	1174	4	2	898	207	1	1	1	487	3	1
Peak-hour factor, PHF	0.92	0.92	0.92	0.92	0.92	0.92	0.92	0.92	0.92	0.92	0.92	0.92
Adj. Flow (vph)	85	1276	4	2	976	225	1	1	1	529	3	1
Lane Group Flow (vph)	85	1280	0	2	1201	0	1	2	0	529	3	1
Turn Type	Prot			Prot			Prot			Prot		Perm
Protected Phases	7	4		3	8		5	2		1	6	
Permitted Phases												6
Actuated Green, G (s)	6.0	85.4		0.8	80.2		0.8	8.9		34.0	42.1	42.1
Effective Green, g (s)	6.0	85.4		0.8	80.2		0.8	8.9		34.0	42.1	42.1
Actuated g/C Ratio	0.04	0.59		0.01	0.55		0.01	0.06		0.23	0.29	0.29
Clearance Time (s)	4.0	4.0		4.0	4.0		4.0	4.0		4.0	4.0	4.0
Vehicle Extension (s)	3.0	3.0		3.0	3.0		3.0	3.0		3.0	3.0	3.0
Lane Grp Cap (vph)	73	1096		10	1000		10	106		415	541	459
v/s Ratio Prot	c0.05	c0.69		0.00	0.66		0.00	c0.00		c0.30	0.00	
v/s Ratio Perm												0.00
v/c Ratio	1.16	1.17		0.20	1.20		0.10	0.02		1.27	0.01	0.00
Uniform Delay, d1	69.6	29.8		71.8	32.4		71.8	64.0		55.6	36.6	36.6
Progression Factor	1.00	1.00		1.00	1.00		1.00	1.00		1.00	1.00	1.00
Incremental Delay, d2	156.5	85.6		9.6	100.2		4.4	0.1		141.2	0.0	0.0
Delay (s)	226.1	115.5		81.5	132.6		76.1	64.1		196.8	36.6	36.6
Level of Service	F	F		F	F		E	E		F	D	D
Approach Delay (s)		122.4			132.5			68.1			195.6	
Approach LOS		F			F			E			F	

Intersection Summary			
HCM Average Control Delay	138.8	HCM Level of Service	F
HCM Volume to Capacity ratio	1.11		
Actuated Cycle Length (s)	145.1	Sum of lost time (s)	12.0
Intersection Capacity Utilization	116.8%	ICU Level of Service	G

c Critical Lane Group

Movement	EBL	EBT	WBT	WBR	SBL	SBR
Lane Configurations						
Ideal Flow (vphpl)	1900	1900	1900	1900	1900	1900
Total Lost time (s)	4.0	4.0	4.0	4.0	4.0	4.0
Lane Util. Factor	1.00	0.95	0.95	1.00	1.00	1.00
Frt	1.00	1.00	1.00	0.85	1.00	0.85
Flt Protected	0.95	1.00	1.00	1.00	0.95	1.00
Satd. Flow (prot)	1770	3539	3539	1583	1770	1583
Flt Permitted	0.95	1.00	1.00	1.00	0.95	1.00
Satd. Flow (perm)	1770	3539	3539	1583	1770	1583
Volume (vph)	53	1024	1024	349	586	22
Peak-hour factor, PHF	0.92	0.92	0.92	0.92	0.92	0.92
Adj. Flow (vph)	58	1113	1113	379	637	24
Lane Group Flow (vph)	58	1113	1113	379	637	24
Turn Type	Prot			Perm		Perm
Protected Phases	7	4	8		1	
Permitted Phases				8		1
Actuated Green, G (s)	2.0	28.2	22.2	22.2	24.4	24.4
Effective Green, g (s)	2.0	28.2	22.2	22.2	24.4	24.4
Actuated g/C Ratio	0.03	0.47	0.37	0.37	0.40	0.40
Clearance Time (s)	4.0	4.0	4.0	4.0	4.0	4.0
Vehicle Extension (s)	3.0	3.0	3.0	3.0	3.0	3.0
Lane Grp Cap (vph)	58	1647	1296	580	713	637
v/s Ratio Prot	0.03	c0.31	c0.31		c0.36	
v/s Ratio Perm				0.24		0.02
v/c Ratio	1.00	0.68	0.86	0.65	0.89	0.04
Uniform Delay, d1	29.3	12.6	17.8	16.0	16.9	11.0
Progression Factor	1.00	1.00	1.00	1.00	1.00	1.00
Incremental Delay, d2	118.2	1.1	5.9	2.6	13.6	0.0
Delay (s)	147.5	13.7	23.6	18.6	30.5	11.0
Level of Service	F	B	C	B	C	B
Approach Delay (s)		20.4	22.4		29.8	
Approach LOS		C	C		C	

Intersection Summary			
HCM Average Control Delay	23.1	HCM Level of Service	C
HCM Volume to Capacity ratio	0.89		
Actuated Cycle Length (s)	60.6	Sum of lost time (s)	12.0
Intersection Capacity Utilization	72.7%	ICU Level of Service	C
c Critical Lane Group			

Movement	EBL	EBT	EBR	WBL	WBT	WBR	NBL	NBT	NBR	SBL	SBT	SBR
Lane Configurations												
Ideal Flow (vphpl)	1900	1900	1900	1900	1900	1900	1900	1900	1900	1900	1900	1900
Total Lost time (s)	4.0	4.0		4.0	4.0		4.0	4.0		4.0	4.0	
Lane Util. Factor	1.00	1.00		1.00	1.00		1.00	1.00		1.00	1.00	
Frt	1.00	0.99		1.00	0.99		1.00	0.93		1.00	0.88	
Flt Protected	0.95	1.00		0.95	1.00		0.95	1.00		0.95	1.00	
Satd. Flow (prot)	1770	1850		1770	1836		1770	1739		1770	1641	
Flt Permitted	0.95	1.00		0.95	1.00		0.95	1.00		0.95	1.00	
Satd. Flow (perm)	1770	1850		1770	1836		1770	1739		1770	1641	
Volume (vph)	140	1562	74	45	1379	144	37	23	18	116	35	135
Peak-hour factor, PHF	0.92	0.92	0.92	0.92	0.92	0.92	0.92	0.92	0.92	0.92	0.92	0.92
Adj. Flow (vph)	152	1698	80	49	1499	157	40	25	20	126	38	147
Lane Group Flow (vph)	152	1778	0	49	1656	0	40	45	0	126	185	0
Turn Type	Prot			Prot			Prot			Prot		
Protected Phases	7	4		3	8		5	2		1	6	
Permitted Phases												
Actuated Green, G (s)	10.0	105.1		4.0	99.1		4.8	11.7		8.0	14.9	
Effective Green, g (s)	10.0	105.1		4.0	99.1		4.8	11.7		8.0	14.9	
Actuated g/C Ratio	0.07	0.73		0.03	0.68		0.03	0.08		0.06	0.10	
Clearance Time (s)	4.0	4.0		4.0	4.0		4.0	4.0		4.0	4.0	
Vehicle Extension (s)	3.0	3.0		3.0	3.0		3.0	3.0		3.0	3.0	
Lane Grp Cap (vph)	122	1343		49	1257		59	141		98	169	
v/s Ratio Prot	c0.09	c0.96		0.03	0.90		0.02	0.03		c0.07	c0.11	
v/s Ratio Perm												
v/c Ratio	1.25	1.32		1.00	1.32		0.68	0.32		1.29	1.09	
Uniform Delay, d1	67.4	19.9		70.4	22.9		69.2	62.8		68.4	65.0	
Progression Factor	1.00	1.00		1.00	1.00		1.00	1.00		1.00	1.00	
Incremental Delay, d2	161.8	151.0		128.6	148.6		26.7	1.3		185.8	96.8	
Delay (s)	229.2	170.9		199.0	171.4		95.9	64.1		254.2	161.8	
Level of Service	F	F		F	F		F	E		F	F	
Approach Delay (s)		175.5			172.2			79.1			199.2	
Approach LOS		F			F			E			F	

Intersection Summary

HCM Average Control Delay	173.9	HCM Level of Service	F
HCM Volume to Capacity ratio	1.29		
Actuated Cycle Length (s)	144.8	Sum of lost time (s)	12.0
Intersection Capacity Utilization	121.2%	ICU Level of Service	H

c Critical Lane Group

Movement	EBL	EBT	EBR	WBL	WBT	WBR	NBL	NBT	NBR	SBL	SBT	SBR
Lane Configurations												
Ideal Flow (vphpl)	1900	1900	1900	1900	1900	1900	1900	1900	1900	1900	1900	1900
Total Lost time (s)	4.0	4.0	4.0	4.0	4.0	4.0		4.0			4.0	
Lane Util. Factor	1.00	1.00	1.00	1.00	1.00	1.00		1.00			1.00	
Frt	1.00	1.00	0.85	1.00	1.00	0.85		0.99			0.90	
Flt Protected	0.95	1.00	1.00	0.95	1.00	1.00		0.96			1.00	
Satd. Flow (prot)	1770	1863	1583	1770	1863	1583		1769			1669	
Flt Permitted	0.95	1.00	1.00	0.95	1.00	1.00		0.54			0.97	
Satd. Flow (perm)	1770	1863	1583	1770	1863	1583		997			1625	
Volume (vph)	99	1178	290	54	1118	10	367	23	27	10	35	137
Peak-hour factor, PHF	0.92	0.92	0.92	0.92	0.92	0.92	0.92	0.92	0.92	0.92	0.92	0.92
Adj. Flow (vph)	108	1280	315	59	1215	11	399	25	29	11	38	149
Lane Group Flow (vph)	108	1280	315	59	1215	11	0	453	0	0	198	0
Turn Type	Prot		Perm	Prot		Perm	Perm			Perm		
Protected Phases	7	4		3	8			2			6	
Permitted Phases			4			8	2			6		
Actuated Green, G (s)	7.0	68.0	68.0	4.0	65.0	65.0		46.0			46.0	
Effective Green, g (s)	7.0	68.0	68.0	4.0	65.0	65.0		46.0			46.0	
Actuated g/C Ratio	0.05	0.52	0.52	0.03	0.50	0.50		0.35			0.35	
Clearance Time (s)	4.0	4.0	4.0	4.0	4.0	4.0		4.0			4.0	
Vehicle Extension (s)	3.0	3.0	3.0	3.0	3.0	3.0		3.0			3.0	
Lane Grp Cap (vph)	95	974	828	54	932	792		353			575	
v/s Ratio Prot	c0.06	c0.69		0.03	0.65							
v/s Ratio Perm			0.20			0.01		c0.45			0.12	
v/c Ratio	1.14	1.31	0.38	1.09	1.30	0.01		1.28			0.34	
Uniform Delay, d1	61.5	31.0	18.5	63.0	32.5	16.4		42.0			30.9	
Progression Factor	1.00	1.00	1.00	1.00	1.00	1.00		1.00			1.00	
Incremental Delay, d2	133.9	148.7	0.3	150.5	144.5	0.0		147.4			0.4	
Delay (s)	195.4	179.7	18.8	213.5	177.0	16.4		189.4			31.3	
Level of Service	F	F	B	F	F	B		F			C	
Approach Delay (s)		150.9			177.3			189.4			31.3	
Approach LOS		F			F			F			C	

Intersection Summary

HCM Average Control Delay	158.5	HCM Level of Service	F
HCM Volume to Capacity ratio	1.31		
Actuated Cycle Length (s)	130.0	Sum of lost time (s)	12.0
Intersection Capacity Utilization	121.0%	ICU Level of Service	H

c Critical Lane Group

Movement	EBL	EBT	EBR	WBL	WBT	WBR	NBL	NBT	NBR	SBL	SBT	SBR
Lane Configurations												
Ideal Flow (vphpl)	1900	1900	1900	1900	1900	1900	1900	1900	1900	1900	1900	1900
Total Lost time (s)	4.0	4.0	4.0	4.0	4.0	4.0	4.0	4.0	4.0	4.0	4.0	4.0
Lane Util. Factor	1.00	1.00	1.00	1.00	1.00	1.00	1.00	1.00	1.00	1.00	1.00	1.00
Frt	1.00	1.00	0.85	1.00	1.00	0.85	1.00	1.00	0.85	1.00	1.00	0.85
Flt Protected	0.95	1.00	1.00	0.95	1.00	1.00	0.95	1.00	1.00	0.95	1.00	1.00
Satd. Flow (prot)	1770	1863	1583	1770	1863	1583	1770	1863	1583	1770	1863	1583
Flt Permitted	0.95	1.00	1.00	0.95	1.00	1.00	0.95	1.00	1.00	0.95	1.00	1.00
Satd. Flow (perm)	1770	1863	1583	1770	1863	1583	1770	1863	1583	1770	1863	1583
Volume (vph)	251	722	439	354	834	18	89	239	129	89	291	505
Peak-hour factor, PHF	0.92	0.92	0.92	0.92	0.92	0.92	0.92	0.92	0.92	0.92	0.92	0.92
Adj. Flow (vph)	273	785	477	385	907	20	97	260	140	97	316	549
Lane Group Flow (vph)	273	785	477	385	907	20	97	260	140	97	316	549
Turn Type	Prot		Perm	Prot		Perm	Prot		Perm	Prot		Perm
Protected Phases	7	4		3	8		5	2		1	6	
Permitted Phases			4			8			2			6
Actuated Green, G (s)	20.0	54.0	54.0	28.0	62.0	62.0	7.0	23.2	23.2	8.0	24.2	24.2
Effective Green, g (s)	20.0	54.0	54.0	28.0	62.0	62.0	7.0	23.2	23.2	8.0	24.2	24.2
Actuated g/C Ratio	0.15	0.42	0.42	0.22	0.48	0.48	0.05	0.18	0.18	0.06	0.19	0.19
Clearance Time (s)	4.0	4.0	4.0	4.0	4.0	4.0	4.0	4.0	4.0	4.0	4.0	4.0
Vehicle Extension (s)	3.0	3.0	3.0	3.0	3.0	3.0	3.0	3.0	3.0	3.0	3.0	3.0
Lane Grp Cap (vph)	274	779	662	384	894	760	96	335	284	110	349	297
v/s Ratio Prot	0.15	0.42		c0.22	c0.49		c0.05	0.14		0.05	0.17	
v/s Ratio Perm			0.30			0.01			0.09			c0.35
v/c Ratio	1.00	1.01	0.72	1.00	1.01	0.03	1.01	0.78	0.49	0.88	0.91	1.85
Uniform Delay, d1	54.6	37.6	31.3	50.6	33.6	17.7	61.1	50.5	47.7	60.1	51.4	52.5
Progression Factor	1.00	1.00	1.00	1.00	1.00	1.00	1.00	1.00	1.00	1.00	1.00	1.00
Incremental Delay, d2	53.0	34.1	3.9	46.6	33.8	0.0	94.7	10.7	1.3	50.6	25.8	394.6
Delay (s)	107.6	71.7	35.2	97.2	67.4	17.7	155.8	61.3	49.1	110.7	77.2	447.1
Level of Service	F	E	D	F	E	B	F	E	D	F	E	F
Approach Delay (s)		66.8			75.4			76.3			291.7	
Approach LOS		E			E			E			F	

Intersection Summary			
HCM Average Control Delay	120.7	HCM Level of Service	F
HCM Volume to Capacity ratio	1.13		
Actuated Cycle Length (s)	129.2	Sum of lost time (s)	8.0
Intersection Capacity Utilization	98.2%	ICU Level of Service	E

c Critical Lane Group

2030 Mid-Level Bridge AM

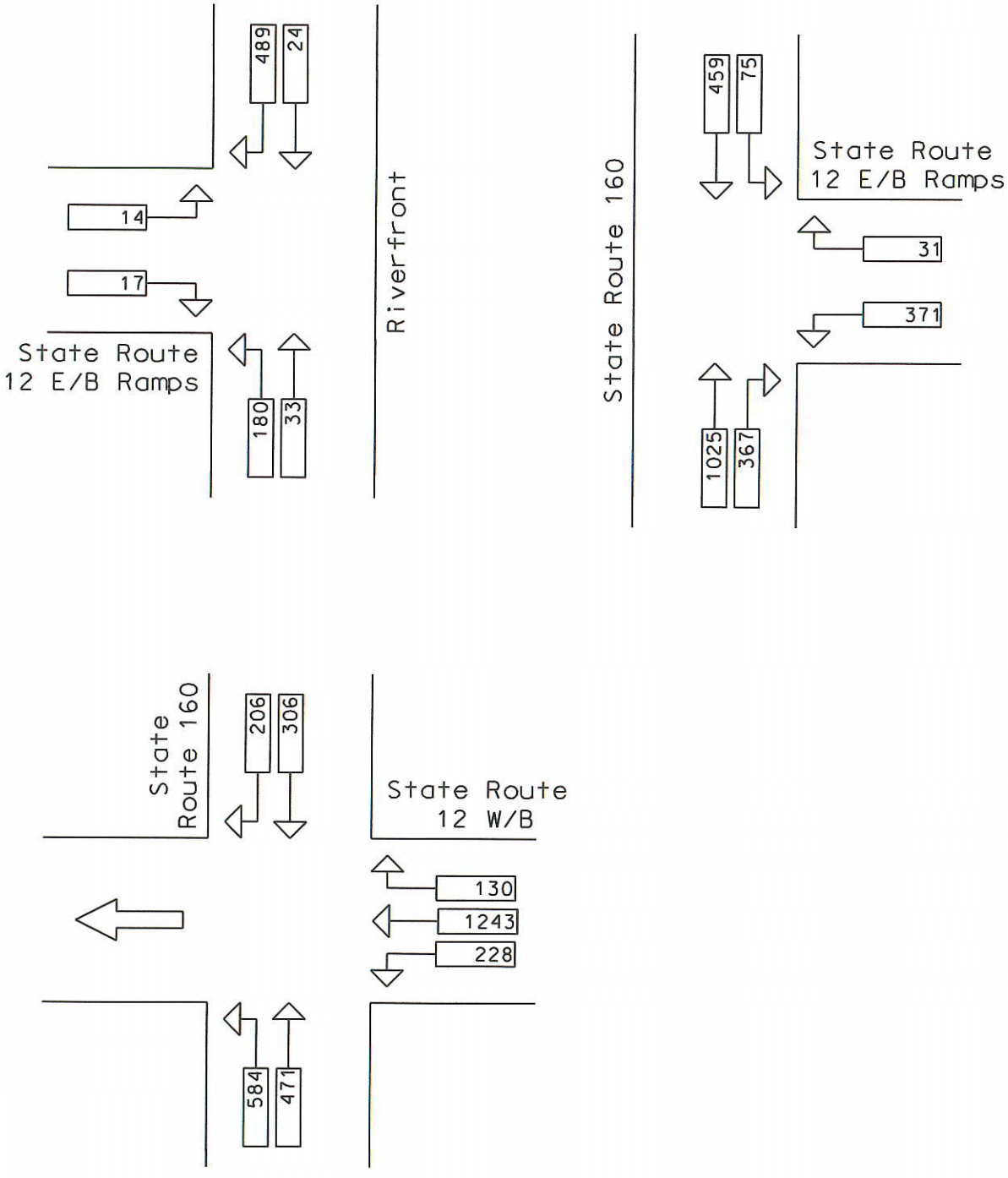

2030 Mid-Level
Bridge AM

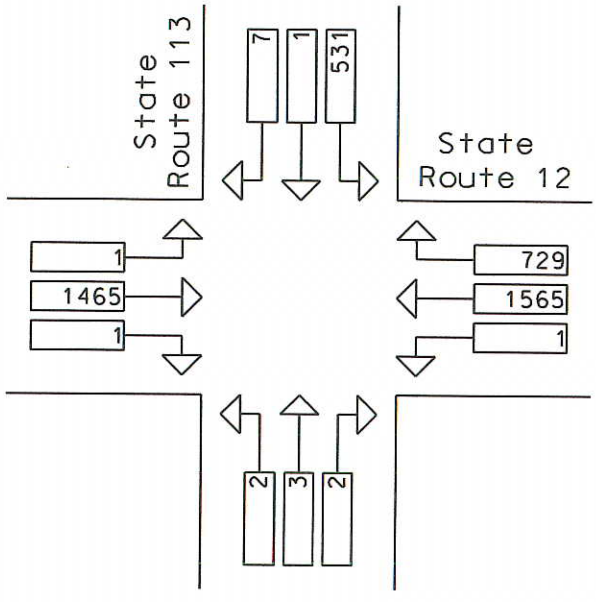

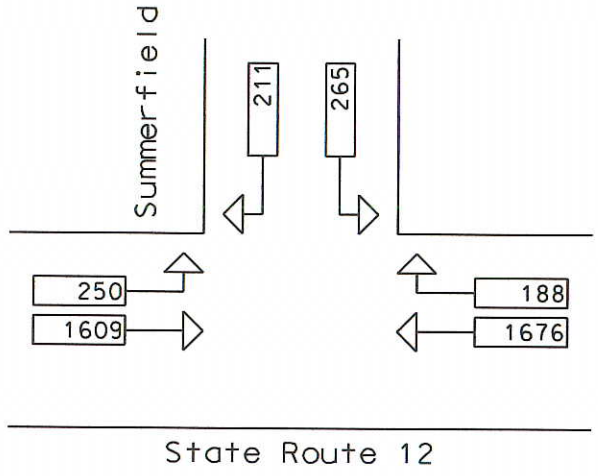

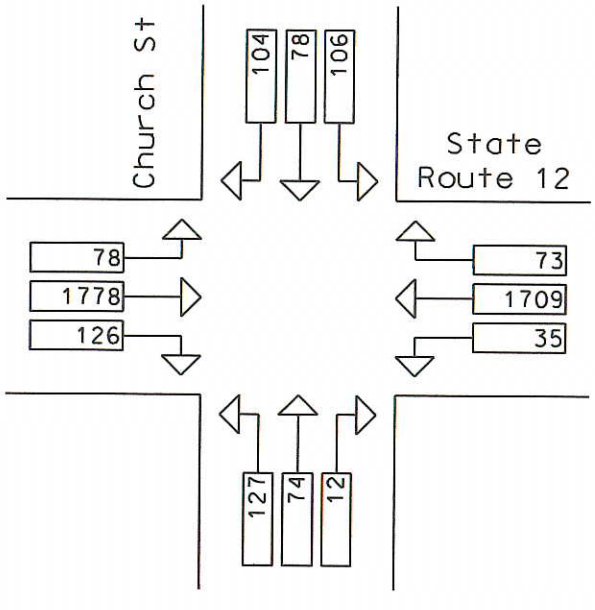

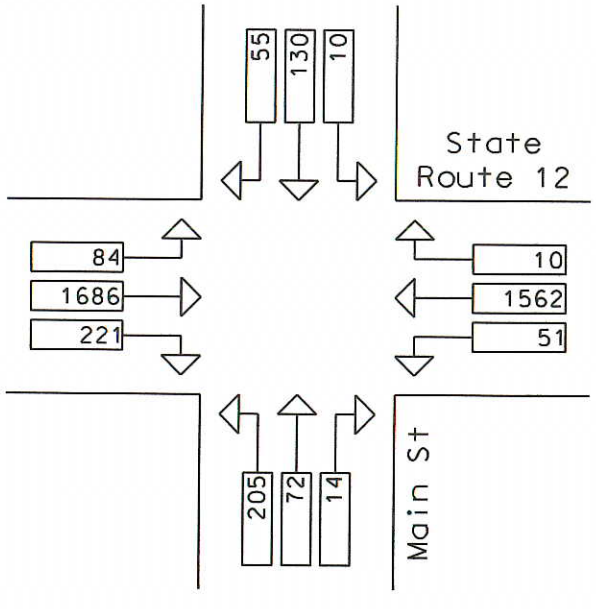

2030 Mid-Level
Bridge PM

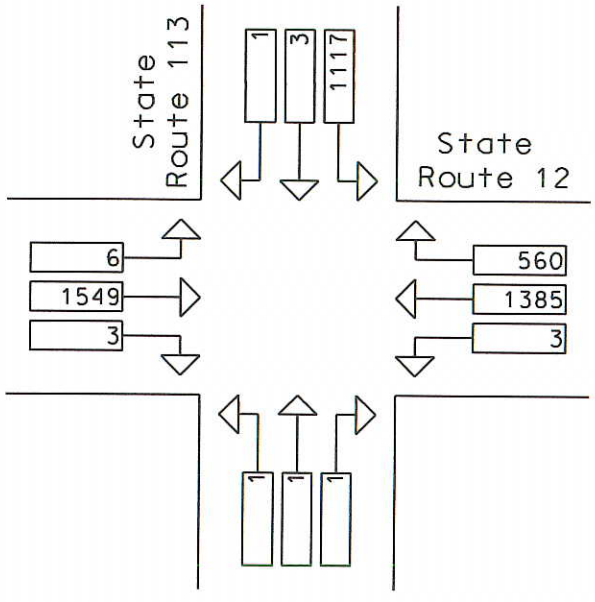

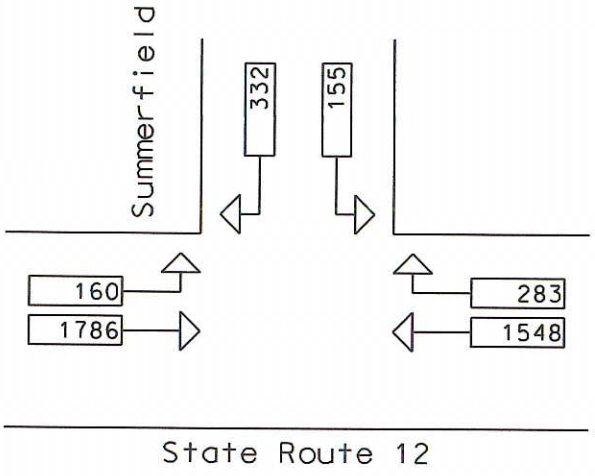

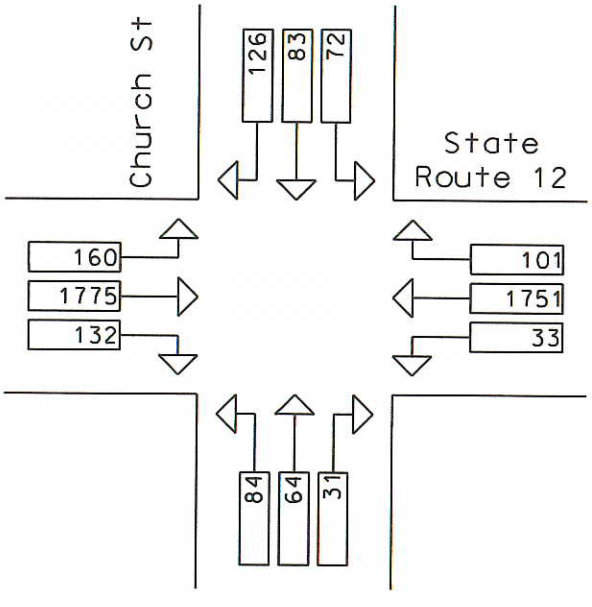

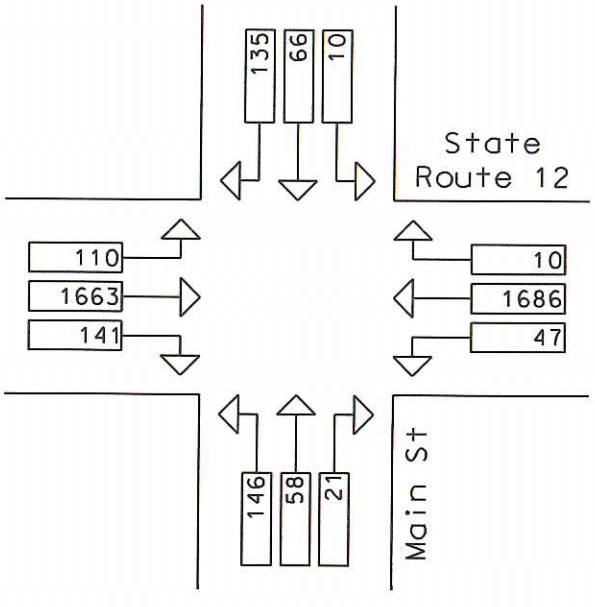

2030 Mid-Level
Bridge PM

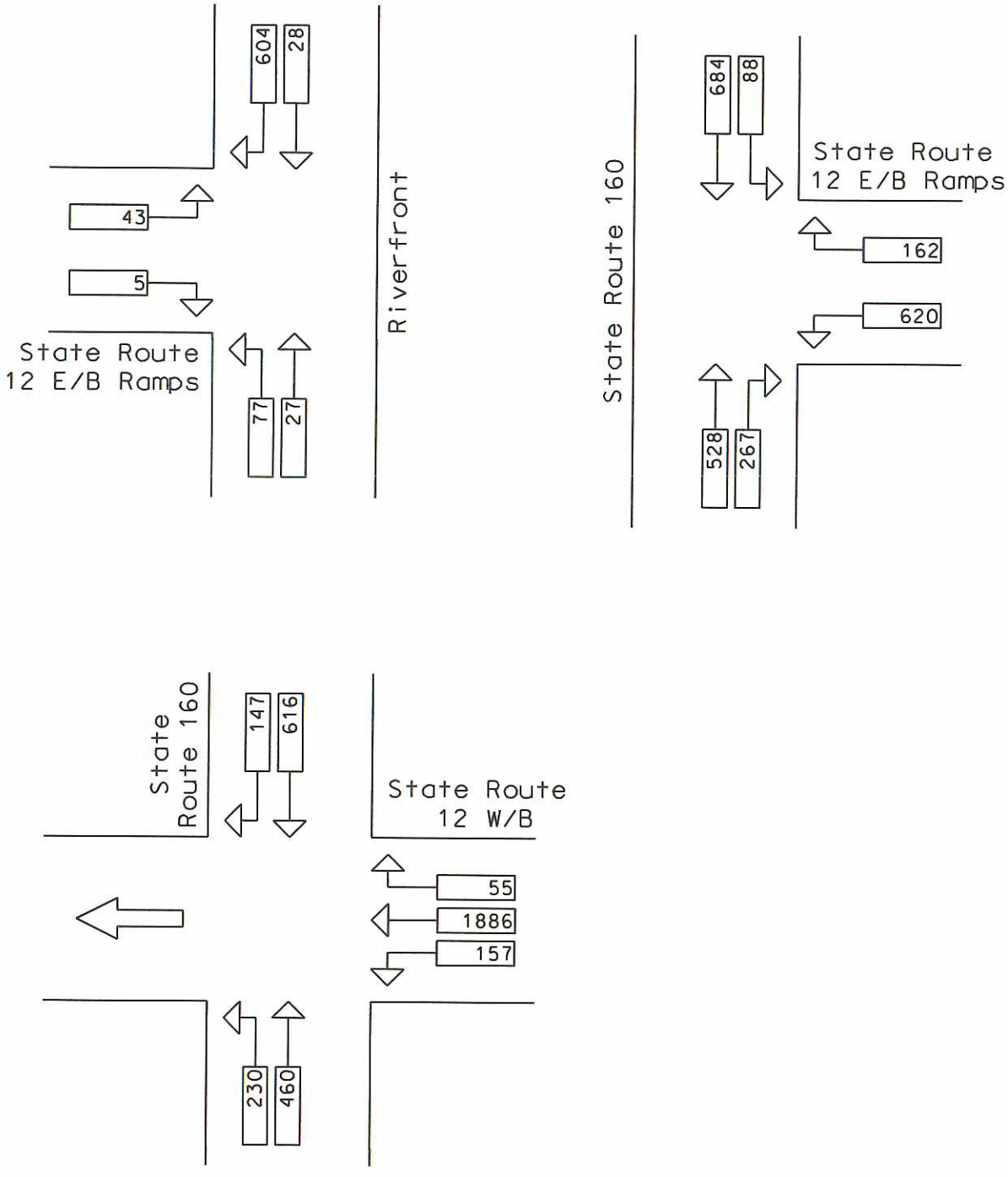

Movement	EBL	EBT	EBR	WBL	WBT	WBR	NBL	NBT	NBR	SBL	SBT	SBR
Lane Configurations												
Ideal Flow (vphpl)	1900	1900	1900	1900	1900	1900	1900	1900	1900	1900	1900	1900
Total Lost time (s)	4.0	4.0		4.0	4.0	4.0	4.0	4.0		4.0	4.0	4.0
Lane Util. Factor	1.00	0.95		1.00	0.95	1.00	1.00	1.00		0.97	1.00	1.00
Frt	1.00	1.00		1.00	1.00	0.85	1.00	0.94		1.00	1.00	0.85
Flt Protected	0.95	1.00		0.95	1.00	1.00	0.95	1.00		0.95	1.00	1.00
Satd. Flow (prot)	1770	3539		1770	3539	1583	1770	1751		3433	1863	1583
Flt Permitted	0.95	1.00		0.95	1.00	1.00	0.95	1.00		0.95	1.00	1.00
Satd. Flow (perm)	1770	3539		1770	3539	1583	1770	1751		3433	1863	1583
Volume (vph)	1	1465	1	1	1565	729	2	3	2	231	1	7
Peak-hour factor, PHF	0.92	0.92	0.92	0.92	0.92	0.92	0.92	0.92	0.92	0.92	0.92	0.92
Adj. Flow (vph)	1	1592	1	1	1701	792	2	3	2	251	1	8
Lane Group Flow (vph)	1	1593	0	1	1701	792	2	5	0	251	1	8
Turn Type	Prot			Prot		pm+ov	Prot			Prot		Perm
Protected Phases	7	4		3	8	1	5	2		1	6	
Permitted Phases						8						6
Actuated Green, G (s)	0.7	39.0		0.7	39.0	47.0	0.7	9.3		8.0	16.6	16.6
Effective Green, g (s)	0.7	39.0		0.7	39.0	47.0	0.7	9.3		8.0	16.6	16.6
Actuated g/C Ratio	0.01	0.53		0.01	0.53	0.64	0.01	0.13		0.11	0.23	0.23
Clearance Time (s)	4.0	4.0		4.0	4.0	4.0	4.0	4.0		4.0	4.0	4.0
Vehicle Extension (s)	3.0	3.0		3.0	3.0	3.0	3.0	3.0		3.0	3.0	3.0
Lane Grp Cap (vph)	17	1891		17	1891	1106	17	223		376	424	360
v/s Ratio Prot	c0.00	0.45		0.00	c0.48	c0.08	0.00	0.00		0.07	0.00	
v/s Ratio Perm						0.42						c0.01
v/c Ratio	0.06	0.84		0.06	0.90	0.72	0.12	0.02		0.67	0.00	0.02
Uniform Delay, d1	35.8	14.4		35.8	15.2	8.6	35.8	27.9		31.2	21.8	21.9
Progression Factor	1.00	1.00		1.00	1.00	1.00	1.00	1.00		1.00	1.00	1.00
Incremental Delay, d2	1.5	3.6		1.5	6.2	2.2	3.1	0.0		4.4	0.0	0.0
Delay (s)	37.3	18.0		37.3	21.4	10.8	38.9	27.9		35.7	21.8	21.9
Level of Service	D	B		D	C	B	D	C		D	C	C
Approach Delay (s)		18.0			18.1			31.1			35.2	
Approach LOS		B			B			C			D	

Intersection Summary			
HCM Average Control Delay	19.1	HCM Level of Service	B
HCM Volume to Capacity ratio	0.66		
Actuated Cycle Length (s)	73.0	Sum of lost time (s)	8.0
Intersection Capacity Utilization	67.5%	ICU Level of Service	B
c Critical Lane Group			

Movement	EBL	EBT	WBT	WBR	SBL	SBR
Lane Configurations						
Ideal Flow (vphpl)	1900	1900	1900	1900	1900	1900
Total Lost time (s)	4.0	4.0	4.0	4.0	4.0	4.0
Lane Util. Factor	1.00	0.95	0.95	1.00	1.00	1.00
Frt	1.00	1.00	1.00	0.85	1.00	0.85
Flt Protected	0.95	1.00	1.00	1.00	0.95	1.00
Satd. Flow (prot)	1770	3539	3539	1583	1770	1583
Flt Permitted	0.95	1.00	1.00	1.00	0.95	1.00
Satd. Flow (perm)	1770	3539	3539	1583	1770	1583
Volume (vph)	250	1609	1676	188	265	211
Peak-hour factor, PHF	0.92	0.92	0.92	0.92	0.92	0.92
Adj. Flow (vph)	272	1749	1822	204	288	229
Lane Group Flow (vph)	272	1749	1822	204	288	229
Turn Type	Prot			Perm		Perm
Protected Phases	7	4	8		1	
Permitted Phases				8		1
Actuated Green, G (s)	14.0	65.0	47.0	47.0	16.4	16.4
Effective Green, g (s)	14.0	65.0	47.0	47.0	16.4	16.4
Actuated g/C Ratio	0.16	0.73	0.53	0.53	0.18	0.18
Clearance Time (s)	4.0	4.0	4.0	4.0	4.0	4.0
Vehicle Extension (s)	3.0	3.0	3.0	3.0	3.0	3.0
Lane Grp Cap (vph)	277	2573	1861	832	325	290
v/s Ratio Prot	c0.15	0.49	c0.51		c0.16	
v/s Ratio Perm				0.13		0.14
v/c Ratio	0.98	0.68	0.98	0.25	0.89	0.79
Uniform Delay, d1	37.6	6.6	20.7	11.5	35.6	34.9
Progression Factor	1.00	1.00	1.00	1.00	1.00	1.00
Incremental Delay, d2	48.8	0.7	16.0	0.2	23.8	13.3
Delay (s)	86.4	7.3	36.7	11.7	59.4	48.2
Level of Service	F	A	D	B	E	D
Approach Delay (s)		18.0	34.2		54.4	
Approach LOS		B	C		D	

Intersection Summary			
HCM Average Control Delay	29.3	HCM Level of Service	C
HCM Volume to Capacity ratio	0.96		
Actuated Cycle Length (s)	89.4	Sum of lost time (s)	12.0
Intersection Capacity Utilization	91.4%	ICU Level of Service	E
c Critical Lane Group			

AM

~~PM~~ Peak Hour

SR12 & CHURCH ST

2030 MID LEVEL BRIDGE

2/29/2008

Movement	EBL	EBT	EBR	WBL	WBT	WBR	NBL	NBT	NBR	SBL	SBT	SBR
Lane Configurations												
Ideal Flow (vphpl)	1900	1900	1900	1900	1900	1900	1900	1900	1900	1900	1900	1900
Total Lost time (s)	4.0	4.0	4.0	4.0	4.0	4.0	4.0	4.0		4.0	4.0	
Lane Util. Factor	1.00	0.95	1.00	1.00	0.95	1.00	1.00	1.00		1.00	1.00	
Frt	1.00	1.00	0.85	1.00	1.00	0.85	1.00	0.98		1.00	0.91	
Flt Protected	0.95	1.00	1.00	0.95	1.00	1.00	0.95	1.00		0.95	1.00	
Satd. Flow (prot)	1770	3539	1583	1770	3539	1583	1770	1824		1770	1703	
Flt Permitted	0.95	1.00	1.00	0.95	1.00	1.00	0.95	1.00		0.95	1.00	
Satd. Flow (perm)	1770	3539	1583	1770	3539	1583	1770	1824		1770	1703	
Volume (vph)	78	1778	126	35	1709	73	127	74	12	106	78	104
Peak-hour factor, PHF	0.92	0.92	0.92	0.92	0.92	0.92	0.92	0.92	0.92	0.92	0.92	0.92
Adj. Flow (vph)	85	1933	137	38	1858	79	138	80	13	115	85	113
Lane Group Flow (vph)	85	1933	137	38	1858	79	138	93	0	115	198	0
Turn Type	Prot		Perm	Prot		Perm	Prot			Prot		
Protected Phases	7	4		3	8		5	2		1	6	
Permitted Phases			4			8						
Actuated Green, G (s)	5.0	50.4	50.4	2.3	47.7	47.7	7.0	12.6		6.0	11.6	
Effective Green, g (s)	5.0	50.4	50.4	2.3	47.7	47.7	7.0	12.6		6.0	11.6	
Actuated g/C Ratio	0.06	0.58	0.58	0.03	0.55	0.55	0.08	0.14		0.07	0.13	
Clearance Time (s)	4.0	4.0	4.0	4.0	4.0	4.0	4.0	4.0		4.0	4.0	
Vehicle Extension (s)	3.0	3.0	3.0	3.0	3.0	3.0	3.0	3.0		3.0	3.0	
Lane Grp Cap (vph)	101	2043	914	47	1934	865	142	263		122	226	
v/s Ratio Prot	c0.05	c0.55		0.02	0.52		c0.08	0.05		0.06	c0.12	
v/s Ratio Perm			0.09			0.05						
v/c Ratio	0.84	0.95	0.15	0.81	0.96	0.09	0.97	0.35		0.94	0.88	
Uniform Delay, d1	40.8	17.2	8.5	42.3	18.9	9.5	40.1	33.7		40.5	37.1	
Progression Factor	1.00	1.00	1.00	1.00	1.00	1.00	1.00	1.00		1.00	1.00	
Incremental Delay, d2	43.7	9.9	0.1	63.4	12.5	0.0	66.6	0.8		63.4	29.3	
Delay (s)	84.4	27.1	8.6	105.6	31.4	9.5	106.6	34.5		103.9	66.4	
Level of Service	F	C	A	F	C	A	F	C		F	E	
Approach Delay (s)		28.2			31.9			77.6			80.2	
Approach LOS		C			C			E			F	

Intersection Summary			
HCM Average Control Delay	35.7	HCM Level of Service	D
HCM Volume to Capacity ratio	0.95		
Actuated Cycle Length (s)	87.3	Sum of lost time (s)	16.0
Intersection Capacity Utilization	89.1%	ICU Level of Service	D
c Critical Lane Group			

Movement	EBL	EBT	EBR	WBL	WBT	WBR	NBL	NBT	NBR	SBL	SBT	SBR
Lane Configurations												
Ideal Flow (vphpl)	1900	1900	1900	1900	1900	1900	1900	1900	1900	1900	1900	1900
Total Lost time (s)	4.0	4.0	4.0	4.0	4.0	4.0		4.0			4.0	
Lane Util. Factor	1.00	0.95	1.00	1.00	0.95	1.00		1.00			1.00	
Frt	1.00	1.00	0.85	1.00	1.00	0.85		0.99			0.96	
Flt Protected	0.95	1.00	1.00	0.95	1.00	1.00		0.97			1.00	
Satd. Flow (prot)	1770	3539	1583	1770	3539	1583		1788			1787	
Flt Permitted	0.95	1.00	1.00	0.95	1.00	1.00		0.57			0.98	
Satd. Flow (perm)	1770	3539	1583	1770	3539	1583		1049			1754	
Volume (vph)	84	1686	221	51	1562	10	205	72	14	10	130	55
Peak-hour factor, PHF	0.92	0.92	0.92	0.92	0.92	0.92	0.92	0.92	0.92	0.92	0.92	0.92
Adj. Flow (vph)	91	1833	240	55	1698	11	223	78	15	11	141	60
Lane Group Flow (vph)	91	1833	240	55	1698	11	0	316	0	0	212	0
Turn Type	Prot		Perm	Prot		Perm	Perm			Perm		
Protected Phases	7	4		3	8			2			6	
Permitted Phases			4			8	2			6		
Actuated Green, G (s)	5.0	48.0	48.0	3.2	46.2	46.2		27.0			27.0	
Effective Green, g (s)	5.0	48.0	48.0	3.2	46.2	46.2		27.0			27.0	
Actuated g/C Ratio	0.06	0.53	0.53	0.04	0.51	0.51		0.30			0.30	
Clearance Time (s)	4.0	4.0	4.0	4.0	4.0	4.0		4.0			4.0	
Vehicle Extension (s)	3.0	3.0	3.0	3.0	3.0	3.0		3.0			3.0	
Lane Grp Cap (vph)	98	1883	842	63	1813	811		314			525	
v/s Ratio Prot	c0.05	c0.52		0.03	0.48							
v/s Ratio Perm			0.15			0.01		c0.30			0.12	
v/c Ratio	0.93	0.97	0.29	0.87	0.94	0.01		1.01			0.40	
Uniform Delay, d1	42.4	20.5	11.6	43.3	20.6	10.8		31.6			25.2	
Progression Factor	1.00	1.00	1.00	1.00	1.00	1.00		1.00			1.00	
Incremental Delay, d2	67.3	14.9	0.2	69.9	9.7	0.0		52.4			0.5	
Delay (s)	109.7	35.3	11.8	113.2	30.3	10.8		84.0			25.7	
Level of Service	F	D	B	F	C	B		F			C	
Approach Delay (s)		35.9			32.8			84.0			25.7	
Approach LOS		D			C			F			C	

Intersection Summary			
HCM Average Control Delay	37.6	HCM Level of Service	D
HCM Volume to Capacity ratio	0.95		
Actuated Cycle Length (s)	90.2	Sum of lost time (s)	8.0
Intersection Capacity Utilization	96.4%	ICU Level of Service	E
c Critical Lane Group			

AM

~~PM~~ Peak Hour

SR12 EB RAMP & RIVERFRONT ST

2030 MID LEVEL BRIDGE

2/29/2008

Movement	EBL	EBR	NBL	NBT	SBT	SBR
Lane Configurations						
Ideal Flow (vphpl)	1900	1900	1900	1900	1900	1900
Total Lost time (s)	4.0	4.0	4.0	4.0	4.0	4.0
Lane Util. Factor	1.00	1.00	1.00	1.00	1.00	1.00
Frt	1.00	0.85	1.00	1.00	1.00	0.85
Flt Protected	0.95	1.00	0.95	1.00	1.00	1.00
Satd. Flow (prot)	1770	1583	1770	1863	1863	1583
Flt Permitted	0.95	1.00	0.95	1.00	1.00	1.00
Satd. Flow (perm)	1770	1583	1770	1863	1863	1583
Volume (vph)	14	17	180	33	24	489
Peak-hour factor, PHF	0.92	0.92	0.92	0.92	0.92	0.92
Adj. Flow (vph)	15	18	196	36	26	532
Lane Group Flow (vph)	15	18	196	36	26	532
Turn Type		Perm	Prot			Perm
Protected Phases	7		5	2	6	
Permitted Phases		7				6
Actuated Green, G (s)	0.9	0.9	8.8	36.0	23.2	23.2
Effective Green, g (s)	0.9	0.9	8.8	36.0	23.2	23.2
Actuated g/C Ratio	0.02	0.02	0.20	0.80	0.52	0.52
Clearance Time (s)	4.0	4.0	4.0	4.0	4.0	4.0
Vehicle Extension (s)	3.0	3.0	3.0	3.0	3.0	3.0
Lane Grp Cap (vph)	35	32	347	1494	963	818
v/s Ratio Prot	0.01		c0.11	0.02	0.01	
v/s Ratio Perm		c0.01				c0.34
v/c Ratio	0.43	0.56	0.56	0.02	0.03	0.65
Uniform Delay, d1	21.7	21.8	16.3	0.9	5.3	7.9
Progression Factor	1.00	1.00	1.00	1.00	1.00	1.00
Incremental Delay, d2	8.2	20.7	2.1	0.0	0.0	1.9
Delay (s)	30.0	42.5	18.4	0.9	5.3	9.8
Level of Service	C	D	B	A	A	A
Approach Delay (s)	36.8			15.7	9.6	
Approach LOS	D			B	A	

Intersection Summary			
HCM Average Control Delay	12.4	HCM Level of Service	B
HCM Volume to Capacity ratio	0.63		
Actuated Cycle Length (s)	44.9	Sum of lost time (s)	12.0
Intersection Capacity Utilization	50.4%	ICU Level of Service	A
c Critical Lane Group			

Movement	EBL	EBT	EBR	WBL	WBT	WBR	NBL	NBT	NBR	SBL	SBT	SBR
Lane Configurations												
Ideal Flow (vphpl)	1900	1900	1900	1900	1900	1900	1900	1900	1900	1900	1900	1900
Total Lost time (s)				4.0	4.0	4.0	4.0	4.0			4.0	4.0
Lane Util. Factor				1.00	0.95	1.00	0.97	0.95			0.95	1.00
Frt				1.00	1.00	0.85	1.00	1.00			1.00	0.85
Flt Protected				0.95	1.00	1.00	0.95	1.00			1.00	1.00
Satd. Flow (prot)				1770	3539	1583	3433	3539			3539	1583
Flt Permitted				0.95	1.00	1.00	0.95	1.00			1.00	1.00
Satd. Flow (perm)				1770	3539	1583	3433	3539			3539	1583
Volume (vph)	0	0	0	228	1243	130	584	471	0	0	306	206
Peak-hour factor, PHF	0.92	0.92	0.92	0.92	0.92	0.92	0.92	0.92	0.92	0.92	0.92	0.92
Adj. Flow (vph)	0	0	0	248	1351	141	635	512	0	0	333	224
Lane Group Flow (vph)	0	0	0	248	1351	141	635	512	0	0	333	224
Turn Type				Prot		Perm	Prot					Perm
Protected Phases				3	8		5	2			6	
Permitted Phases						8						6
Actuated Green, G (s)				29.3	29.3	29.3	15.2	32.4			13.2	13.2
Effective Green, g (s)				29.3	29.3	29.3	15.2	32.4			13.2	13.2
Actuated g/C Ratio				0.42	0.42	0.42	0.22	0.46			0.19	0.19
Clearance Time (s)				4.0	4.0	4.0	4.0	4.0			4.0	4.0
Vehicle Extension (s)				3.0	3.0	3.0	3.0	3.0			3.0	3.0
Lane Grp Cap (vph)				744	1488	665	749	1645			670	300
v/s Ratio Prot				0.14	c0.38		c0.18	0.14			0.09	
v/s Ratio Perm						0.09						c0.14
v/c Ratio				0.33	0.91	0.21	0.85	0.31			0.50	0.75
Uniform Delay, d1				13.6	18.9	12.9	26.1	11.7			25.3	26.7
Progression Factor				1.00	1.00	1.00	1.00	1.00			1.00	1.00
Incremental Delay, d2				0.3	8.3	0.2	8.8	0.1			0.6	9.7
Delay (s)				13.9	27.3	13.0	35.0	11.8			25.9	36.4
Level of Service				B	C	B	C	B			C	D
Approach Delay (s)		0.0			24.2			24.6			30.1	
Approach LOS		A			C			C			C	

Intersection Summary			
HCM Average Control Delay	25.3	HCM Level of Service	C
HCM Volume to Capacity ratio	0.86		
Actuated Cycle Length (s)	69.7	Sum of lost time (s)	12.0
Intersection Capacity Utilization	79.3%	ICU Level of Service	C
c Critical Lane Group			

Movement	WBL	WBR	NBT	NBR	SBL	SBT
Lane Configurations						
Ideal Flow (vphpl)	1900	1900	1900	1900	1900	1900
Total Lost time (s)	4.0	4.0	4.0	4.0	4.0	4.0
Lane Util. Factor	1.00	1.00	1.00	1.00	1.00	1.00
Frt	1.00	0.85	1.00	0.85	1.00	1.00
Flt Protected	0.95	1.00	1.00	1.00	0.95	1.00
Satd. Flow (prot)	1770	1583	1863	1583	1770	1863
Flt Permitted	0.95	1.00	1.00	1.00	0.95	1.00
Satd. Flow (perm)	1770	1583	1863	1583	1770	1863
Volume (vph)	371	31	1025	367	75	459
Peak-hour factor, PHF	0.92	0.92	0.92	0.92	0.92	0.92
Adj. Flow (vph)	403	34	1114	399	82	499
Lane Group Flow (vph)	403	34	1114	399	82	499
Turn Type		Perm		Perm	Prot	
Protected Phases	8		2		1	6
Permitted Phases		8		2		
Actuated Green, G (s)	20.0	20.0	53.0	53.0	5.0	62.0
Effective Green, g (s)	20.0	20.0	53.0	53.0	5.0	62.0
Actuated g/C Ratio	0.22	0.22	0.59	0.59	0.06	0.69
Clearance Time (s)	4.0	4.0	4.0	4.0	4.0	4.0
Vehicle Extension (s)	3.0	3.0	3.0	3.0	3.0	3.0
Lane Grp Cap (vph)	393	352	1097	932	98	1283
v/s Ratio Prot	c0.23		c0.60		c0.05	0.27
v/s Ratio Perm		0.02		0.25		
v/c Ratio	1.03	0.10	1.02	0.43	0.84	0.39
Uniform Delay, d1	35.0	27.8	18.5	10.2	42.1	5.9
Progression Factor	1.00	1.00	1.00	1.00	1.00	1.00
Incremental Delay, d2	52.1	0.1	31.1	0.3	43.2	0.2
Delay (s)	87.1	27.9	49.6	10.5	85.3	6.1
Level of Service	F	C	D	B	F	A
Approach Delay (s)	82.5		39.3			17.3
Approach LOS	F		D			B

Intersection Summary			
HCM Average Control Delay	41.7	HCM Level of Service	D
HCM Volume to Capacity ratio	1.01		
Actuated Cycle Length (s)	90.0	Sum of lost time (s)	12.0
Intersection Capacity Utilization	95.5%	ICU Level of Service	E
c Critical Lane Group			

Movement	EBL	EBT	EBR	WBL	WBT	WBR	NBL	NBT	NBR	SBL	SBT	SBR
Lane Configurations												
Ideal Flow (vphpl)	1900	1900	1900	1900	1900	1900	1900	1900	1900	1900	1900	1900
Total Lost time (s)	4.0	4.0		4.0	4.0	4.0	4.0	4.0		4.0	4.0	4.0
Lane Util. Factor	1.00	0.91		1.00	0.95	1.00	1.00	1.00		0.97	1.00	1.00
Frt	1.00	1.00		1.00	1.00	0.85	1.00	0.92		1.00	1.00	0.85
Flt Protected	0.95	1.00		0.95	1.00	1.00	0.95	1.00		0.95	1.00	1.00
Satd. Flow (prot)	1770	5084		1770	3539	1583	1770	1723		3433	1863	1583
Flt Permitted	0.95	1.00		0.95	1.00	1.00	0.95	1.00		0.95	1.00	1.00
Satd. Flow (perm)	1770	5084		1770	3539	1583	1770	1723		3433	1863	1583
Volume (vph)	6	1549	3	3	1385	560	1	1	1	1117	3	1
Peak-hour factor, PHF	0.92	0.92	0.92	0.92	0.92	0.92	0.92	0.92	0.92	0.92	0.92	0.92
Adj. Flow (vph)	7	1684	3	3	1505	609	1	1	1	1214	3	1
Lane Group Flow (vph)	7	1687	0	3	1505	609	1	2	0	1214	3	1
Turn Type	Prot			Prot		pm+ov	Prot			Prot		Perm
Protected Phases	7	4		3	8	1	5	2		1	6	
Permitted Phases						8						6
Actuated Green, G (s)	0.8	62.0		0.8	62.0	114.0	0.8	9.0		52.0	60.2	60.2
Effective Green, g (s)	0.8	62.0		0.8	62.0	114.0	0.8	9.0		52.0	60.2	60.2
Actuated g/C Ratio	0.01	0.44		0.01	0.44	0.82	0.01	0.06		0.37	0.43	0.43
Clearance Time (s)	4.0	4.0		4.0	4.0	4.0	4.0	4.0		4.0	4.0	4.0
Vehicle Extension (s)	3.0	3.0		3.0	3.0	3.0	3.0	3.0		3.0	3.0	3.0
Lane Grp Cap (vph)	10	2255		10	1570	1336	10	111		1277	802	682
v/s Ratio Prot	c0.00	0.33		0.00	c0.43	c0.17	0.00	c0.00		c0.35	0.00	
v/s Ratio Perm						0.22						0.00
v/c Ratio	0.70	0.75		0.30	0.96	0.46	0.10	0.02		0.95	0.00	0.00
Uniform Delay, d1	69.4	32.4		69.2	37.7	3.8	69.1	61.3		42.7	22.7	22.7
Progression Factor	1.00	1.00		1.00	1.00	1.00	1.00	1.00		1.00	1.00	1.00
Incremental Delay, d2	120.0	1.4		16.1	14.0	0.2	4.4	0.1		14.9	0.0	0.0
Delay (s)	189.4	33.8		85.4	51.6	4.0	73.5	61.3		57.6	22.7	22.7
Level of Service	F	C		F	D	A	E	E		E	C	C
Approach Delay (s)		34.4			38.0			65.4			57.5	
Approach LOS		C			D			E			E	

Intersection Summary			
HCM Average Control Delay	41.5	HCM Level of Service	D
HCM Volume to Capacity ratio	0.86		
Actuated Cycle Length (s)	139.8	Sum of lost time (s)	12.0
Intersection Capacity Utilization	89.6%	ICU Level of Service	D
c Critical Lane Group			

Movement	EBL	EBT	WBT	WBR	SBL	SBR
Lane Configurations						
Ideal Flow (vphpl)	1900	1900	1900	1900	1900	1900
Total Lost time (s)	4.0	4.0	4.0	4.0	4.0	4.0
Lane Util. Factor	1.00	0.95	0.95	1.00	1.00	1.00
Frt	1.00	1.00	1.00	0.85	1.00	0.85
Flt Protected	0.95	1.00	1.00	1.00	0.95	1.00
Satd. Flow (prot)	1770	3539	3539	1583	1770	1583
Flt Permitted	0.95	1.00	1.00	1.00	0.95	1.00
Satd. Flow (perm)	1770	3539	3539	1583	1770	1583
Volume (vph)	160	1786	1548	283	155	332
Peak-hour factor, PHF	0.92	0.92	0.92	0.92	0.92	0.92
Adj. Flow (vph)	174	1941	1683	308	168	361
Lane Group Flow (vph)	174	1941	1683	308	168	361
Turn Type	Prot			Perm		Perm
Protected Phases	7	4	8		1	
Permitted Phases				8		1
Actuated Green, G (s)	8.0	44.1	32.1	32.1	10.3	10.3
Effective Green, g (s)	8.0	44.1	32.1	32.1	10.3	10.3
Actuated g/C Ratio	0.13	0.71	0.51	0.51	0.17	0.17
Clearance Time (s)	4.0	4.0	4.0	4.0	4.0	4.0
Vehicle Extension (s)	3.0	3.0	3.0	3.0	3.0	3.0
Lane Grp Cap (vph)	227	2501	1821	814	292	261
v/s Ratio Prot	0.10	c0.55	c0.48		0.09	
v/s Ratio Perm				0.19		c0.23
v/c Ratio	0.77	0.78	0.92	0.38	0.58	1.38
Uniform Delay, d1	26.3	5.9	14.0	9.1	24.0	26.0
Progression Factor	1.00	1.00	1.00	1.00	1.00	1.00
Incremental Delay, d2	14.3	1.6	8.4	0.3	2.7	194.5
Delay (s)	40.6	7.5	22.5	9.4	26.8	220.5
Level of Service	D	A	C	A	C	F
Approach Delay (s)		10.2	20.4		159.0	
Approach LOS		B	C		F	

Intersection Summary			
HCM Average Control Delay	31.6	HCM Level of Service	C
HCM Volume to Capacity ratio	1.02		
Actuated Cycle Length (s)	62.4	Sum of lost time (s)	12.0
Intersection Capacity Utilization	75.5%	ICU Level of Service	C
c Critical Lane Group			

Movement	EBL	EBT	EBR	WBL	WBT	WBR	NBL	NBT	NBR	SBL	SBT	SBR
Lane Configurations												
Ideal Flow (vphpl)	1900	1900	1900	1900	1900	1900	1900	1900	1900	1900	1900	1900
Total Lost time (s)	4.0	4.0	4.0	4.0	4.0	4.0	4.0	4.0		4.0	4.0	
Lane Util. Factor	1.00	0.95	1.00	1.00	0.95	1.00	1.00	1.00		1.00	1.00	
Frt	1.00	1.00	0.85	1.00	1.00	0.85	1.00	0.95		1.00	0.91	
Flt Protected	0.95	1.00	1.00	0.95	1.00	1.00	0.95	1.00		0.95	1.00	
Satd. Flow (prot)	1770	3539	1583	1770	3539	1583	1770	1771		1770	1694	
Flt Permitted	0.95	1.00	1.00	0.95	1.00	1.00	0.95	1.00		0.95	1.00	
Satd. Flow (perm)	1770	3539	1583	1770	3539	1583	1770	1771		1770	1694	
Volume (vph)	160	1775	132	33	1751	101	84	64	31	72	83	126
Peak-hour factor, PHF	0.92	0.92	0.92	0.92	0.92	0.92	0.92	0.92	0.92	0.92	0.92	0.92
Adj. Flow (vph)	174	1929	143	36	1903	110	91	70	34	78	90	137
Lane Group Flow (vph)	174	1929	143	36	1903	110	91	104	0	78	227	0
Turn Type	Prot		Perm	Prot		Perm	Prot			Prot		
Protected Phases	7	4		3	8		5	2		1	6	
Permitted Phases			4			8						
Actuated Green, G (s)	10.0	61.4	61.4	2.3	53.7	53.7	5.0	13.5		5.0	13.5	
Effective Green, g (s)	10.0	61.4	61.4	2.3	53.7	53.7	5.0	13.5		5.0	13.5	
Actuated g/C Ratio	0.10	0.63	0.63	0.02	0.55	0.55	0.05	0.14		0.05	0.14	
Clearance Time (s)	4.0	4.0	4.0	4.0	4.0	4.0	4.0	4.0		4.0	4.0	
Vehicle Extension (s)	3.0	3.0	3.0	3.0	3.0	3.0	3.0	3.0		3.0	3.0	
Lane Grp Cap (vph)	180	2213	990	41	1935	866	90	243		90	233	
v/s Ratio Prot	c0.10	0.55		0.02	c0.54		c0.05	0.06		0.04	c0.13	
v/s Ratio Perm			0.09			0.07						
v/c Ratio	0.97	0.87	0.14	0.88	0.98	0.13	1.01	0.43		0.87	0.97	
Uniform Delay, d1	43.9	15.2	7.6	47.8	21.8	10.8	46.6	38.8		46.3	42.2	
Progression Factor	1.00	1.00	1.00	1.00	1.00	1.00	1.00	1.00		1.00	1.00	
Incremental Delay, d2	56.7	4.1	0.1	92.9	16.6	0.1	97.9	1.2		53.4	51.3	
Delay (s)	100.7	19.2	7.6	140.8	38.4	10.9	144.5	40.0		99.7	93.5	
Level of Service	F	B	A	F	D	B	F	D		F	F	
Approach Delay (s)		24.8			38.7			88.8			95.0	
Approach LOS		C			D			F			F	

Intersection Summary			
HCM Average Control Delay	37.8	HCM Level of Service	D
HCM Volume to Capacity ratio	0.98		
Actuated Cycle Length (s)	98.2	Sum of lost time (s)	16.0
Intersection Capacity Utilization	93.8%	ICU Level of Service	E
c Critical Lane Group			

Movement	EBL	EBT	EBR	WBL	WBT	WBR	NBL	NBT	NBR	SBL	SBT	SBR
Lane Configurations												
Ideal Flow (vphpl)	1900	1900	1900	1900	1900	1900	1900	1900	1900	1900	1900	1900
Total Lost time (s)	4.0	4.0	4.0	4.0	4.0	4.0		4.0			4.0	
Lane Util. Factor	1.00	0.95	1.00	1.00	0.95	1.00		1.00			1.00	
Frt	1.00	1.00	0.85	1.00	1.00	0.85		0.99			0.91	
Flt Protected	0.95	1.00	1.00	0.95	1.00	1.00		0.97			1.00	
Satd. Flow (prot)	1770	3539	1583	1770	3539	1583		1781			1698	
Flt Permitted	0.95	1.00	1.00	0.95	1.00	1.00		0.52			0.98	
Satd. Flow (perm)	1770	3539	1583	1770	3539	1583		958			1671	
Volume (vph)	110	1663	141	47	1686	10	146	58	21	10	66	135
Peak-hour factor, PHF	0.92	0.92	0.92	0.92	0.92	0.92	0.92	0.92	0.92	0.92	0.92	0.92
Adj. Flow (vph)	120	1808	153	51	1833	11	159	63	23	11	72	147
Lane Group Flow (vph)	120	1808	153	51	1833	11	0	245	0	0	230	0
Turn Type	Prot		Perm	Prot		Perm	Perm			Perm		
Protected Phases	7	4		3	8			2			6	
Permitted Phases			4			8	2			6		
Actuated Green, G (s)	6.0	47.2	47.2	2.4	43.6	43.6		20.0			20.0	
Effective Green, g (s)	6.0	47.2	47.2	2.4	43.6	43.6		20.0			20.0	
Actuated g/C Ratio	0.07	0.58	0.58	0.03	0.53	0.53		0.25			0.25	
Clearance Time (s)	4.0	4.0	4.0	4.0	4.0	4.0		4.0			4.0	
Vehicle Extension (s)	3.0	3.0	3.0	3.0	3.0	3.0		3.0			3.0	
Lane Grp Cap (vph)	130	2047	916	52	1891	846		235			410	
v/s Ratio Prot	c0.07	c0.51		0.03	c0.52							
v/s Ratio Perm			0.10			0.01		c0.26			0.14	
v/c Ratio	0.92	0.88	0.17	0.98	0.97	0.01		1.04			0.56	
Uniform Delay, d1	37.6	14.8	8.0	39.6	18.4	8.9		30.8			27.0	
Progression Factor	1.00	1.00	1.00	1.00	1.00	1.00		1.00			1.00	
Incremental Delay, d2	55.6	4.9	0.1	117.4	14.0	0.0		70.3			1.8	
Delay (s)	93.2	19.7	8.1	156.9	32.3	8.9		101.1			28.7	
Level of Service	F	B	A	F	C	A		F			C	
Approach Delay (s)		23.1			35.6			101.1			28.7	
Approach LOS		C			D			F			C	

Intersection Summary			
HCM Average Control Delay	33.0	HCM Level of Service	C
HCM Volume to Capacity ratio	1.03		
Actuated Cycle Length (s)	81.6	Sum of lost time (s)	16.0
Intersection Capacity Utilization	97.5%	ICU Level of Service	E
c Critical Lane Group			

Movement	EBL	EBR	NBL	NBT	SBT	SBR
Lane Configurations						
Ideal Flow (vphpl)	1900	1900	1900	1900	1900	1900
Total Lost time (s)	4.0	4.0	4.0	4.0	4.0	4.0
Lane Util. Factor	1.00	1.00	1.00	1.00	1.00	1.00
Frt	1.00	0.85	1.00	1.00	1.00	0.85
Flt Protected	0.95	1.00	0.95	1.00	1.00	1.00
Satd. Flow (prot)	1770	1583	1770	1863	1863	1583
Flt Permitted	0.95	1.00	0.95	1.00	1.00	1.00
Satd. Flow (perm)	1770	1583	1770	1863	1863	1583
Volume (vph)	43	5	77	27	28	604
Peak-hour factor, PHF	0.92	0.92	0.92	0.92	0.92	0.92
Adj. Flow (vph)	47	5	84	29	30	657
Lane Group Flow (vph)	47	5	84	29	30	657
Turn Type		Perm	Prot			Perm
Protected Phases	7		5	2	6	
Permitted Phases		7				6
Actuated Green, G (s)	2.4	2.4	3.0	45.1	38.1	38.1
Effective Green, g (s)	2.4	2.4	3.0	45.1	38.1	38.1
Actuated g/C Ratio	0.04	0.04	0.05	0.81	0.69	0.69
Clearance Time (s)	4.0	4.0	4.0	4.0	4.0	4.0
Vehicle Extension (s)	3.0	3.0	3.0	3.0	3.0	3.0
Lane Grp Cap (vph)	77	68	96	1514	1279	1087
v/s Ratio Prot	c0.03		c0.05	0.02	0.02	
v/s Ratio Perm		0.00				c0.41
v/c Ratio	0.61	0.07	0.88	0.02	0.02	0.60
Uniform Delay, d1	26.1	25.5	26.1	1.0	2.8	4.7
Progression Factor	1.00	1.00	1.00	1.00	1.00	1.00
Incremental Delay, d2	13.5	0.5	53.4	0.0	0.0	1.0
Delay (s)	39.6	25.9	79.4	1.0	2.8	5.6
Level of Service	D	C	E	A	A	A
Approach Delay (s)	38.2			59.3	5.5	
Approach LOS	D			E	A	

Intersection Summary			
HCM Average Control Delay	14.6	HCM Level of Service	B
HCM Volume to Capacity ratio	0.62		
Actuated Cycle Length (s)	55.5	Sum of lost time (s)	12.0
Intersection Capacity Utilization	52.0%	ICU Level of Service	A
c Critical Lane Group			

Movement	EBL	EBT	EBR	WBL	WBT	WBR	NBL	NBT	NBR	SBL	SBT	SBR
Lane Configurations												
Ideal Flow (vphpl)	1900	1900	1900	1900	1900	1900	1900	1900	1900	1900	1900	1900
Total Lost time (s)				4.0	4.0	4.0	4.0	4.0			4.0	4.0
Lane Util. Factor				1.00	0.95	1.00	0.97	0.95			0.95	1.00
Frt				1.00	1.00	0.85	1.00	1.00			1.00	0.85
Flt Protected				0.95	1.00	1.00	0.95	1.00			1.00	1.00
Satd. Flow (prot)				1770	3539	1583	3433	3539			3539	1583
Flt Permitted				0.95	1.00	1.00	0.95	1.00			1.00	1.00
Satd. Flow (perm)				1770	3539	1583	3433	3539			3539	1583
Volume (vph)	0	0	0	157	1886	55	230	460	0	0	616	147
Peak-hour factor, PHF	0.92	0.92	0.92	0.92	0.92	0.92	0.92	0.92	0.92	0.92	0.92	0.92
Adj. Flow (vph)	0	0	0	171	2050	60	250	500	0	0	670	160
Lane Group Flow (vph)	0	0	0	171	2050	60	250	500	0	0	670	160
Turn Type				Prot		Perm	Prot					Perm
Protected Phases				3	8		5	2			6	
Permitted Phases						8						6
Actuated Green, G (s)				53.0	53.0	53.0	7.0	29.0			18.0	18.0
Effective Green, g (s)				53.0	53.0	53.0	7.0	29.0			18.0	18.0
Actuated g/C Ratio				0.59	0.59	0.59	0.08	0.32			0.20	0.20
Clearance Time (s)				4.0	4.0	4.0	4.0	4.0			4.0	4.0
Vehicle Extension (s)				3.0	3.0	3.0	3.0	3.0			3.0	3.0
Lane Grp Cap (vph)				1042	2084	932	267	1140			708	317
v/s Ratio Prot				0.10	c0.58		c0.07	0.14			c0.19	
v/s Ratio Perm						0.04						0.10
v/c Ratio				0.16	0.98	0.06	0.94	0.44			0.95	0.50
Uniform Delay, d1				8.4	18.1	7.9	41.3	24.1			35.5	32.0
Progression Factor				1.00	1.00	1.00	1.00	1.00			1.00	1.00
Incremental Delay, d2				0.1	15.9	0.0	37.9	0.3			21.5	1.3
Delay (s)				8.5	34.0	7.9	79.2	24.3			57.0	33.3
Level of Service				A	C	A	E	C			E	C
Approach Delay (s)		0.0			31.4			42.6			52.4	
Approach LOS		A			C			D			D	

Intersection Summary			
HCM Average Control Delay	38.1	HCM Level of Service	D
HCM Volume to Capacity ratio	0.97		
Actuated Cycle Length (s)	90.0	Sum of lost time (s)	12.0
Intersection Capacity Utilization	92.3%	ICU Level of Service	E
c Critical Lane Group			

Movement	WBL	WBR	NBT	NBR	SBL	SBT
Lane Configurations						
Ideal Flow (vphpl)	1900	1900	1900	1900	1900	1900
Total Lost time (s)	4.0	4.0	4.0	4.0	4.0	4.0
Lane Util. Factor	1.00	1.00	1.00	1.00	1.00	1.00
Frt	1.00	0.85	1.00	0.85	1.00	1.00
Flt Protected	0.95	1.00	1.00	1.00	0.95	1.00
Satd. Flow (prot)	1770	1583	1863	1583	1770	1863
Flt Permitted	0.95	1.00	1.00	1.00	0.95	1.00
Satd. Flow (perm)	1770	1583	1863	1583	1770	1863
Volume (vph)	620	162	528	267	88	684
Peak-hour factor, PHF	0.92	0.92	0.92	0.92	0.92	0.92
Adj. Flow (vph)	674	176	574	290	96	743
Lane Group Flow (vph)	674	176	574	290	96	743
Turn Type		Perm		Perm	Prot	
Protected Phases	8		2		1	6
Permitted Phases		8		2		
Actuated Green, G (s)	29.9	29.9	25.4	25.4	4.3	33.7
Effective Green, g (s)	29.9	29.9	25.4	25.4	4.3	33.7
Actuated g/C Ratio	0.42	0.42	0.35	0.35	0.06	0.47
Clearance Time (s)	4.0	4.0	4.0	4.0	4.0	4.0
Vehicle Extension (s)	3.0	3.0	3.0	3.0	3.0	3.0
Lane Grp Cap (vph)	739	661	661	562	106	877
v/s Ratio Prot	c0.38		0.31		0.05	c0.40
v/s Ratio Perm		0.11		0.18		
v/c Ratio	0.91	0.27	0.87	0.52	0.91	0.85
Uniform Delay, d1	19.6	13.7	21.5	18.2	33.4	16.7
Progression Factor	1.00	1.00	1.00	1.00	1.00	1.00
Incremental Delay, d2	15.5	0.2	11.7	0.8	57.9	7.6
Delay (s)	35.1	13.9	33.2	19.0	91.4	24.3
Level of Service	D	B	C	B	F	C
Approach Delay (s)	30.7		28.4			32.0
Approach LOS	C		C			C

Intersection Summary			
HCM Average Control Delay	30.4	HCM Level of Service	C
HCM Volume to Capacity ratio	0.88		
Actuated Cycle Length (s)	71.6	Sum of lost time (s)	8.0
Intersection Capacity Utilization	83.1%	ICU Level of Service	D
c Critical Lane Group			

2030 High-Level Bridge AM

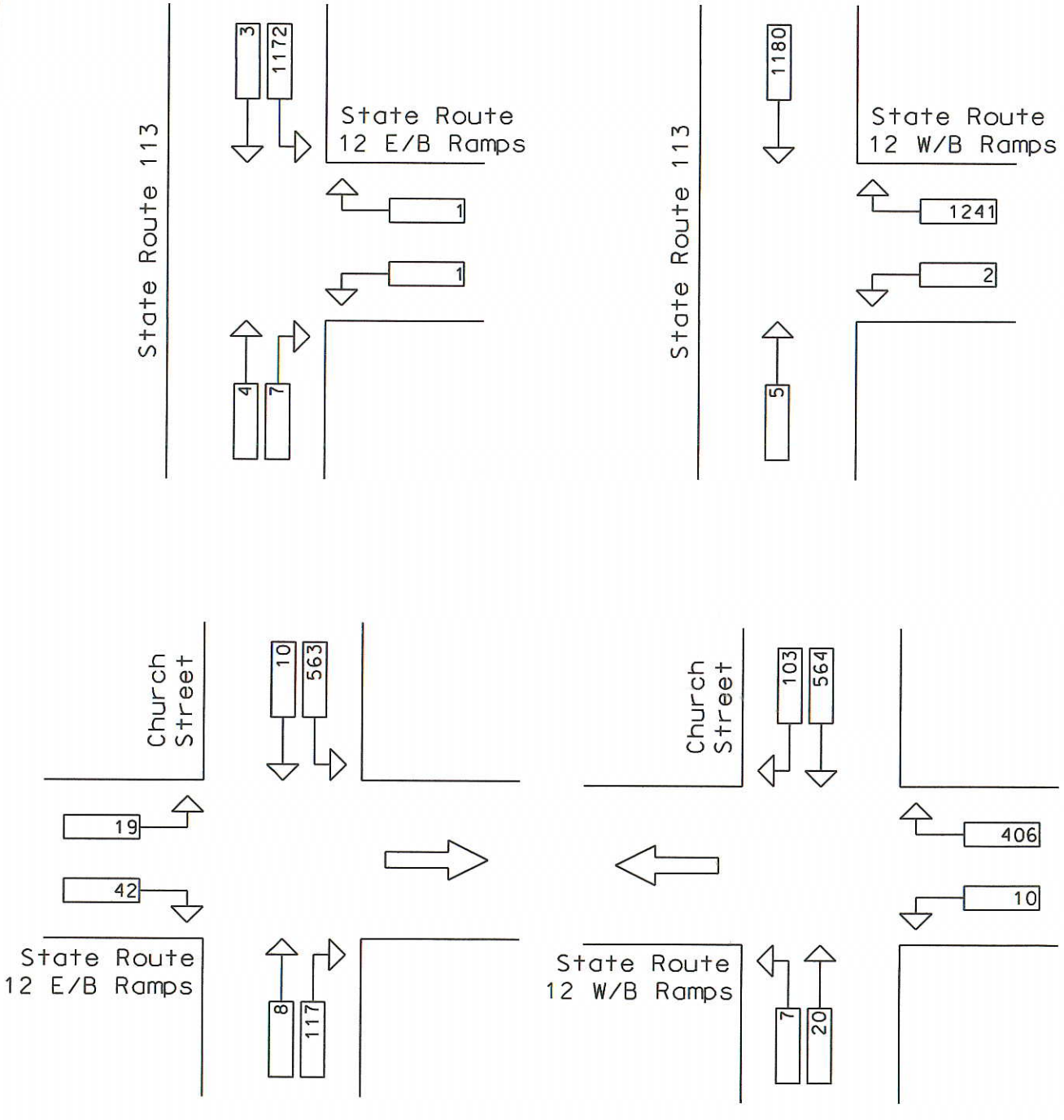

2030 High-Level Bridge AM

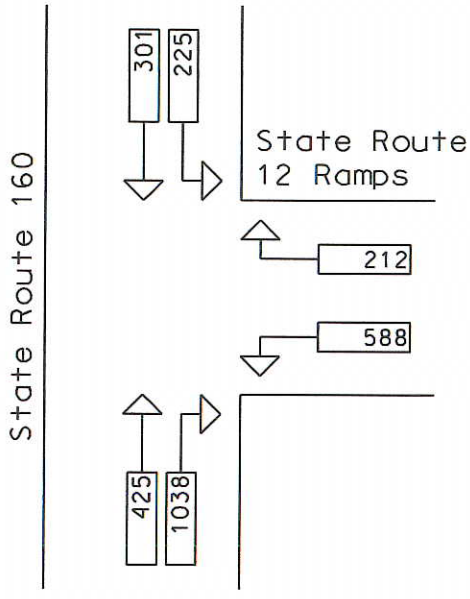

2030 High-Level Bridge PM

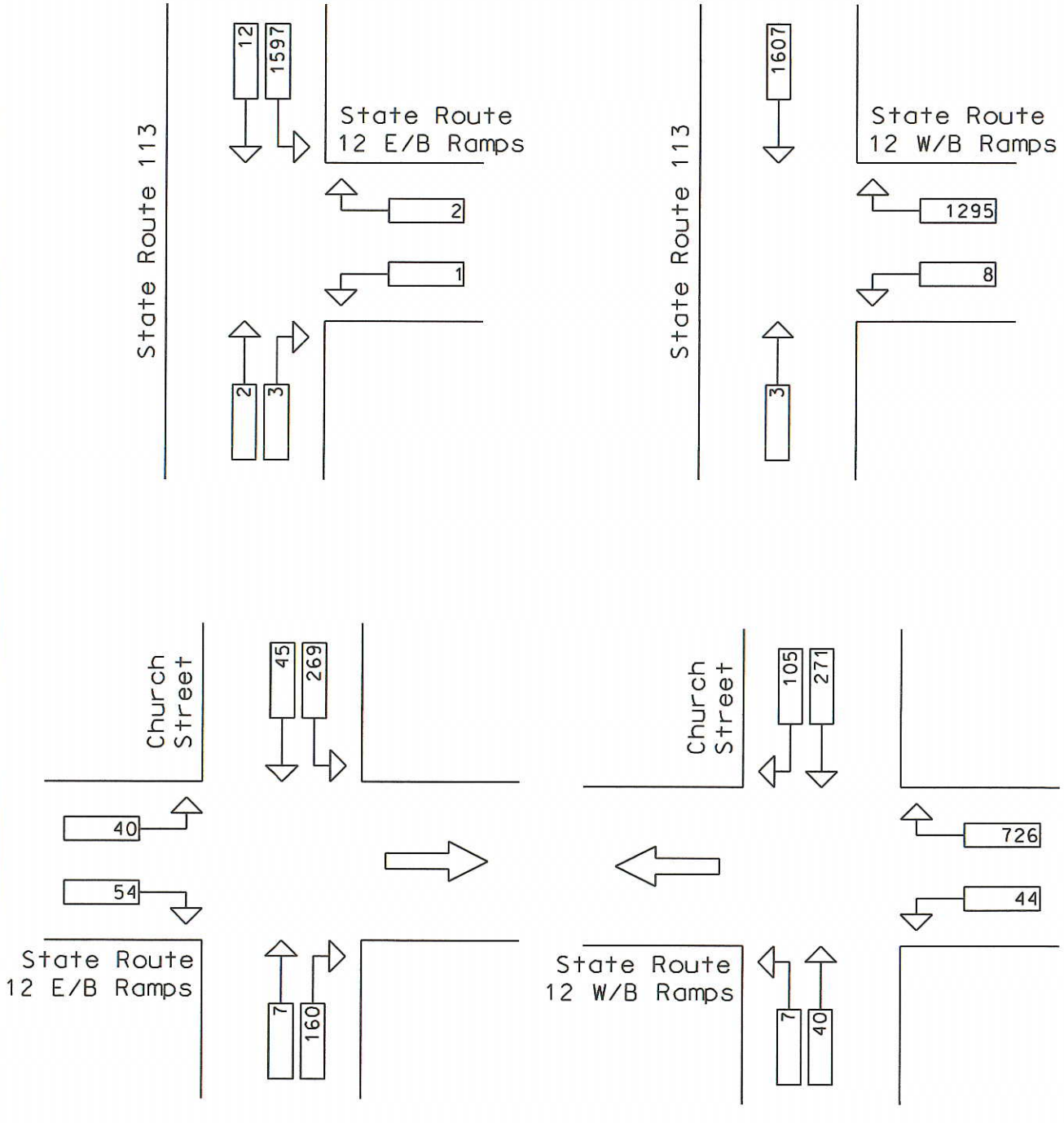

2030 High-Level Bridge PM

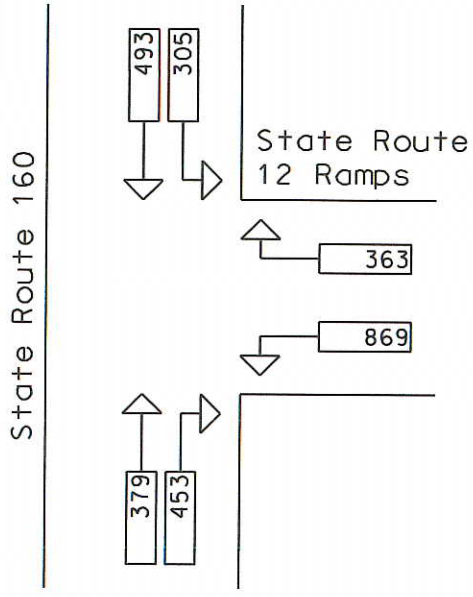

Movement	WBL	WBR	NBT	NBR	SBL	SBT
Lane Configurations						
Ideal Flow (vphpl)	1900	1900	1900	1900	1900	1900
Total Lost time (s)	4.0	4.0	4.0	4.0	4.0	4.0
Lane Util. Factor	1.00	1.00	1.00	1.00	0.97	1.00
Frt	1.00	0.85	1.00	0.85	1.00	1.00
Flt Protected	0.95	1.00	1.00	1.00	0.95	1.00
Satd. Flow (prot)	1770	1583	1863	1583	3433	1863
Flt Permitted	0.95	1.00	1.00	1.00	0.95	1.00
Satd. Flow (perm)	1770	1583	1863	1583	3433	1863
Volume (vph)	1	1	4	7	1172	3
Peak-hour factor, PHF	0.92	0.92	0.92	0.92	0.92	0.92
Adj. Flow (vph)	1	1	4	8	1274	3
Lane Group Flow (vph)	1	1	4	8	1274	3
Turn Type		Perm		Perm	Prot	
Protected Phases	8		2		1	6
Permitted Phases		8		2		
Actuated Green, G (s)	0.8	0.8	6.2	6.2	21.2	31.4
Effective Green, g (s)	0.8	0.8	6.2	6.2	21.2	31.4
Actuated g/C Ratio	0.02	0.02	0.15	0.15	0.53	0.78
Clearance Time (s)	4.0	4.0	4.0	4.0	4.0	4.0
Vehicle Extension (s)	3.0	3.0	3.0	3.0	3.0	3.0
Lane Grp Cap (vph)	35	32	287	244	1810	1455
v/s Ratio Prot	0.00		0.00		c0.37	0.00
v/s Ratio Perm		c0.00		c0.01		
v/c Ratio	0.03	0.03	0.01	0.03	0.70	0.00
Uniform Delay, d1	19.3	19.3	14.4	14.5	7.1	1.0
Progression Factor	1.00	1.00	1.00	1.00	1.00	1.00
Incremental Delay, d2	0.3	0.4	0.0	0.1	1.3	0.0
Delay (s)	19.7	19.7	14.4	14.5	8.4	1.0
Level of Service	B	B	B	B	A	A
Approach Delay (s)	19.7		14.5			8.4
Approach LOS	B		B			A

Intersection Summary			
HCM Average Control Delay	8.5	HCM Level of Service	A
HCM Volume to Capacity ratio	0.54		
Actuated Cycle Length (s)	40.2	Sum of lost time (s)	12.0
Intersection Capacity Utilization	53.0%	ICU Level of Service	A
c Critical Lane Group			

Movement	WBL	WBR	NBT	NBR	SBL	SBT
Lane Configurations						
Ideal Flow (vphpl)	1900	1900	1900	1900	1900	1900
Total Lost time (s)	4.0	4.0	4.0			4.0
Lane Util. Factor	1.00	1.00	1.00			1.00
Frt	1.00	0.85	1.00			1.00
Flt Protected	0.95	1.00	1.00			1.00
Satd. Flow (prot)	1770	1583	1863			1863
Flt Permitted	0.95	1.00	1.00			1.00
Satd. Flow (perm)	1770	1583	1863			1863
Volume (vph)	2	1241	5	0	0	1180
Peak-hour factor, PHF	0.92	0.92	0.92	0.92	0.92	0.92
Adj. Flow (vph)	2	1349	5	0	0	1283
Lane Group Flow (vph)	2	1349	5	0	0	1283
Turn Type		Free				
Protected Phases	8		2			6
Permitted Phases		Free				
Actuated Green, G (s)	1.2	123.2	114.0			114.0
Effective Green, g (s)	1.2	123.2	114.0			114.0
Actuated g/C Ratio	0.01	1.00	0.93			0.93
Clearance Time (s)	4.0		4.0			4.0
Vehicle Extension (s)	3.0		3.0			3.0
Lane Grp Cap (vph)	17	1583	1724			1724
v/s Ratio Prot	0.00		0.00			0.69
v/s Ratio Perm		c0.85				
v/c Ratio	0.12	0.85	0.00			0.74
Uniform Delay, d1	60.5	0.0	0.3			1.1
Progression Factor	1.00	1.00	1.00			1.00
Incremental Delay, d2	3.1	6.0	0.0			1.8
Delay (s)	63.6	6.0	0.3			2.9
Level of Service	E	A	A			A
Approach Delay (s)	6.1		0.3			2.9
Approach LOS	A		A			A

Intersection Summary			
HCM Average Control Delay	4.5	HCM Level of Service	A
HCM Volume to Capacity ratio	0.85		
Actuated Cycle Length (s)	123.2	Sum of lost time (s)	0.0
Intersection Capacity Utilization	77.5%	ICU Level of Service	C
c Critical Lane Group			

Movement	EBL	EBT	EBR	WBL	WBT	WBR	NBL	NBT	NBR	SBL	SBT	SBR
Lane Configurations												
Ideal Flow (vphpl)	1900	1900	1900	1900	1900	1900	1900	1900	1900	1900	1900	1900
Total Lost time (s)	4.0		4.0					4.0	4.0	4.0	4.0	
Lane Util. Factor	1.00		1.00					1.00	1.00	1.00	1.00	
Frt	1.00		0.85					1.00	0.85	1.00	1.00	
Flt Protected	0.95		1.00					1.00	1.00	0.95	1.00	
Satd. Flow (prot)	1770		1583					1863	1583	1770	1863	
Flt Permitted	0.95		1.00					1.00	1.00	0.75	1.00	
Satd. Flow (perm)	1770		1583					1863	1583	1400	1863	
Volume (vph)	19	0	42	0	0	0	0	8	117	563	10	0
Peak-hour factor, PHF	0.92	0.92	0.92	0.92	0.92	0.92	0.92	0.92	0.92	0.92	0.92	0.92
Adj. Flow (vph)	21	0	46	0	0	0	0	9	127	612	11	0
Lane Group Flow (vph)	21	0	46	0	0	0	0	9	127	612	11	0
Turn Type	Prot		custom						Perm	Perm		
Protected Phases	7		3					2			6	
Permitted Phases			4 3						2	6		
Actuated Green, G (s)	5.6		5.6					65.4	65.4	65.4	65.4	
Effective Green, g (s)	5.6		5.6					65.4	65.4	65.4	65.4	
Actuated g/C Ratio	0.07		0.07					0.83	0.83	0.83	0.83	
Clearance Time (s)	4.0		4.0					4.0	4.0	4.0	4.0	
Vehicle Extension (s)	3.0		3.0					3.0	3.0	3.0	3.0	
Lane Grp Cap (vph)	125		112					1542	1310	1159	1542	
v/s Ratio Prot	0.01		c0.03					0.00			0.01	
v/s Ratio Perm									0.08	c0.44		
v/c Ratio	0.17		0.41					0.01	0.10	0.53	0.01	
Uniform Delay, d1	34.5		35.1					1.2	1.3	2.1	1.2	
Progression Factor	1.00		1.00					1.00	1.00	1.00	1.00	
Incremental Delay, d2	0.6		2.4					0.0	0.0	0.4	0.0	
Delay (s)	35.1		37.6					1.2	1.3	2.5	1.2	
Level of Service	D		D					A	A	A	A	
Approach Delay (s)		36.8			0.0			1.3			2.5	
Approach LOS		D			A			A			A	

Intersection Summary			
HCM Average Control Delay	5.1	HCM Level of Service	A
HCM Volume to Capacity ratio	0.52		
Actuated Cycle Length (s)	79.0	Sum of lost time (s)	8.0
Intersection Capacity Utilization	50.6%	ICU Level of Service	A
c Critical Lane Group			

Movement	EBL	EBT	EBR	WBL	WBT	WBR	NBL	NBT	NBR	SBL	SBT	SBR
Lane Configurations												
Ideal Flow (vphpl)	1900	1900	1900	1900	1900	1900	1900	1900	1900	1900	1900	1900
Total Lost time (s)				4.0		4.0	4.0	4.0			4.0	4.0
Lane Util. Factor				1.00		1.00	1.00	1.00			1.00	1.00
Frt				1.00		0.85	1.00	1.00			1.00	0.85
Flt Protected				0.95		1.00	0.95	1.00			1.00	1.00
Satd. Flow (prot)				1770		1583	1770	1863			1863	1583
Flt Permitted				0.95		1.00	0.95	1.00			1.00	1.00
Satd. Flow (perm)				1770		1583	1770	1863			1863	1583
Volume (vph)	0	0	0	10	0	406	7	20	0	0	564	103
Peak-hour factor, PHF	0.92	0.92	0.92	0.92	0.92	0.92	0.92	0.92	0.92	0.92	0.92	0.92
Adj. Flow (vph)	0	0	0	11	0	441	8	22	0	0	613	112
Lane Group Flow (vph)	0	0	0	11	0	441	8	22	0	0	613	112
Turn Type				Prot		custom	Prot					Perm
Protected Phases				3		8	5	2			6	
Permitted Phases						Free						6
Actuated Green, G (s)				6.1		35.3	0.5	21.2			16.7	16.7
Effective Green, g (s)				6.1		35.3	0.5	21.2			16.7	16.7
Actuated g/C Ratio				0.17		1.00	0.01	0.60			0.47	0.47
Clearance Time (s)				4.0		4.0	4.0	4.0			4.0	4.0
Vehicle Extension (s)				3.0		3.0	3.0	3.0			3.0	3.0
Lane Grp Cap (vph)				306		1583	25	1119			881	749
v/s Ratio Prot				0.01		c0.05	0.00	0.01			c0.33	
v/s Ratio Perm						0.23						0.07
v/c Ratio				0.04		0.28	0.32	0.02			0.70	0.15
Uniform Delay, d1				12.2		0.0	17.2	2.8			7.3	5.3
Progression Factor				1.00		1.00	1.00	1.00			1.00	1.00
Incremental Delay, d2				0.0		0.1	7.3	0.0			2.4	0.1
Delay (s)				12.2		0.1	24.5	2.9			9.7	5.4
Level of Service				B		A	C	A			A	A
Approach Delay (s)		0.0			0.4			8.6			9.0	
Approach LOS		A			A			A			A	

Intersection Summary			
HCM Average Control Delay	5.8	HCM Level of Service	A
HCM Volume to Capacity ratio	0.50		
Actuated Cycle Length (s)	35.3	Sum of lost time (s)	4.0
Intersection Capacity Utilization	42.3%	ICU Level of Service	A
c Critical Lane Group			

Movement	WBL	WBR	NBT	NBR	SBL	SBT
Lane Configurations						
Ideal Flow (vphpl)	1900	1900	1900	1900	1900	1900
Total Lost time (s)	4.0	4.0	4.0	4.0	4.0	4.0
Lane Util. Factor	0.97	1.00	1.00	1.00	1.00	1.00
Frt	1.00	0.85	1.00	0.85	1.00	1.00
Flt Protected	0.95	1.00	1.00	1.00	0.95	1.00
Satd. Flow (prot)	3433	1583	1863	1583	1770	1863
Flt Permitted	0.95	1.00	1.00	1.00	0.95	1.00
Satd. Flow (perm)	3433	1583	1863	1583	1770	1863
Volume (vph)	588	212	425	1038	225	301
Peak-hour factor, PHF	0.92	0.92	0.92	0.92	0.92	0.92
Adj. Flow (vph)	639	230	462	1128	245	327
Lane Group Flow (vph)	639	230	462	1128	245	327
Turn Type		Perm		pm+ov	Prot	
Protected Phases	8		2	8	1	6
Permitted Phases		8		2		
Actuated Green, G (s)	27.0	27.0	19.2	46.2	11.0	34.2
Effective Green, g (s)	27.0	27.0	19.2	46.2	11.0	34.2
Actuated g/C Ratio	0.39	0.39	0.28	0.67	0.16	0.49
Clearance Time (s)	4.0	4.0	4.0	4.0	4.0	4.0
Vehicle Extension (s)	3.0	3.0	3.0	3.0	3.0	3.0
Lane Grp Cap (vph)	1339	618	517	1148	281	921
v/s Ratio Prot	0.19		0.25	c0.38	c0.14	0.18
v/s Ratio Perm		0.15		0.33		
v/c Ratio	0.48	0.37	0.89	0.98	0.87	0.36
Uniform Delay, d1	15.8	15.1	24.0	11.1	28.4	10.7
Progression Factor	1.00	1.00	1.00	1.00	1.00	1.00
Incremental Delay, d2	0.3	0.4	17.6	22.3	24.3	0.2
Delay (s)	16.1	15.4	41.6	33.4	52.7	11.0
Level of Service	B	B	D	C	D	B
Approach Delay (s)	15.9		35.8			28.8
Approach LOS	B		D			C

Intersection Summary			
HCM Average Control Delay	28.8	HCM Level of Service	C
HCM Volume to Capacity ratio	0.96		
Actuated Cycle Length (s)	69.2	Sum of lost time (s)	8.0
Intersection Capacity Utilization	90.1%	ICU Level of Service	E
c Critical Lane Group			

Movement	WBL	WBR	NBT	NBR	SBL	SBT
Lane Configurations						
Ideal Flow (vphpl)	1900	1900	1900	1900	1900	1900
Total Lost time (s)	4.0	4.0	4.0	4.0	4.0	4.0
Lane Util. Factor	1.00	1.00	1.00	1.00	0.97	1.00
Frt	1.00	0.85	1.00	0.85	1.00	1.00
Flt Protected	0.95	1.00	1.00	1.00	0.95	1.00
Satd. Flow (prot)	1770	1583	1863	1583	3433	1863
Flt Permitted	0.95	1.00	1.00	1.00	0.95	1.00
Satd. Flow (perm)	1770	1583	1863	1583	3433	1863
Volume (vph)	1	2	2	3	1597	12
Peak-hour factor, PHF	0.92	0.92	0.92	0.92	0.92	0.92
Adj. Flow (vph)	1	2	2	3	1736	13
Lane Group Flow (vph)	1	2	2	3	1736	13
Turn Type		Perm		Perm	Prot	
Protected Phases	8		2		1	6
Permitted Phases		8		2		
Actuated Green, G (s)	0.9	0.9	5.9	5.9	37.8	47.7
Effective Green, g (s)	0.9	0.9	5.9	5.9	37.8	47.7
Actuated g/C Ratio	0.02	0.02	0.10	0.10	0.67	0.84
Clearance Time (s)	4.0	4.0	4.0	4.0	4.0	4.0
Vehicle Extension (s)	3.0	3.0	3.0	3.0	3.0	3.0
Lane Grp Cap (vph)	28	25	194	165	2293	1570
v/s Ratio Prot	0.00		0.00		c0.51	0.01
v/s Ratio Perm		c0.00		c0.00		
v/c Ratio	0.04	0.08	0.01	0.02	0.76	0.01
Uniform Delay, d1	27.4	27.4	22.7	22.8	6.3	0.7
Progression Factor	1.00	1.00	1.00	1.00	1.00	1.00
Incremental Delay, d2	0.5	1.4	0.0	0.0	1.5	0.0
Delay (s)	27.9	28.8	22.8	22.8	7.8	0.7
Level of Service	C	C	C	C	A	A
Approach Delay (s)	28.5		22.8			7.7
Approach LOS	C		C			A

Intersection Summary			
HCM Average Control Delay	7.8	HCM Level of Service	A
HCM Volume to Capacity ratio	0.65		
Actuated Cycle Length (s)	56.6	Sum of lost time (s)	12.0
Intersection Capacity Utilization	66.2%	ICU Level of Service	B
c Critical Lane Group			

Movement	WBL	WBR	NBT	NBR	SBL	SBT
Lane Configurations						
Ideal Flow (vphpl)	1900	1900	1900	1900	1900	1900
Total Lost time (s)	4.0	4.0	4.0			4.0
Lane Util. Factor	1.00	1.00	1.00			1.00
Frt	1.00	0.85	1.00			1.00
Flt Protected	0.95	1.00	1.00			1.00
Satd. Flow (prot)	1770	1583	1863			1863
Flt Permitted	0.95	1.00	1.00			1.00
Satd. Flow (perm)	1770	1583	1863			1863
Volume (vph)	8	1295	3	0	0	1607
Peak-hour factor, PHF	0.92	0.92	0.92	0.92	0.92	0.92
Adj. Flow (vph)	9	1408	3	0	0	1747
Lane Group Flow (vph)	9	1408	3	0	0	1747
Turn Type		Free				
Protected Phases	8		2			6
Permitted Phases		Free				
Actuated Green, G (s)	1.4	135.5	126.1			126.1
Effective Green, g (s)	1.4	135.5	126.1			126.1
Actuated g/C Ratio	0.01	1.00	0.93			0.93
Clearance Time (s)	4.0		4.0			4.0
Vehicle Extension (s)	3.0		3.0			3.0
Lane Grp Cap (vph)	18	1583	1734			1734
v/s Ratio Prot	0.01		0.00			c0.94
v/s Ratio Perm		c0.89				
v/c Ratio	0.50	0.89	0.00			1.01
Uniform Delay, d1	66.7	0.0	0.3			4.7
Progression Factor	1.00	1.00	1.00			1.00
Incremental Delay, d2	20.2	7.9	0.0			23.4
Delay (s)	86.9	7.9	0.3			28.1
Level of Service	F	A	A			C
Approach Delay (s)	8.4		0.3			28.1
Approach LOS	A		A			C

Intersection Summary			
HCM Average Control Delay	19.3	HCM Level of Service	B
HCM Volume to Capacity ratio	1.00		
Actuated Cycle Length (s)	135.5	Sum of lost time (s)	4.0
Intersection Capacity Utilization	101.9%	ICU Level of Service	F
c Critical Lane Group			

Movement	EBL	EBT	EBR	WBL	WBT	WBR	NBL	NBT	NBR	SBL	SBT	SBR
Lane Configurations												
Ideal Flow (vphpl)	1900	1900	1900	1900	1900	1900	1900	1900	1900	1900	1900	1900
Total Lost time (s)	4.0		4.0					4.0	4.0	4.0	4.0	
Lane Util. Factor	1.00		1.00					1.00	1.00	1.00	1.00	
Frt	1.00		0.85					1.00	0.85	1.00	1.00	
Flt Protected	0.95		1.00					1.00	1.00	0.95	1.00	
Satd. Flow (prot)	1770		1583					1863	1583	1770	1863	
Flt Permitted	0.95		1.00					1.00	1.00	0.75	1.00	
Satd. Flow (perm)	1770		1583					1863	1583	1402	1863	
Volume (vph)	40	0	54	0	0	0	0	7	160	269	45	0
Peak-hour factor, PHF	0.92	0.92	0.92	0.92	0.92	0.92	0.92	0.92	0.92	0.92	0.92	0.92
Adj. Flow (vph)	43	0	59	0	0	0	0	8	174	292	49	0
Lane Group Flow (vph)	43	0	59	0	0	0	0	8	174	292	49	0
Turn Type	Prot		custom						Perm	Perm		
Protected Phases	7		3					2			6	
Permitted Phases			4 3						2	6		
Actuated Green, G (s)	5.0		5.0					42.8	42.8	42.8	42.8	
Effective Green, g (s)	5.0		5.0					42.8	42.8	42.8	42.8	
Actuated g/C Ratio	0.09		0.09					0.77	0.77	0.77	0.77	
Clearance Time (s)	4.0		4.0					4.0	4.0	4.0	4.0	
Vehicle Extension (s)	3.0		3.0					3.0	3.0	3.0	3.0	
Lane Grp Cap (vph)	159		142					1429	1214	1075	1429	
v/s Ratio Prot	0.02		c0.04					0.00			0.03	
v/s Ratio Perm									0.11	c0.21		
v/c Ratio	0.27		0.42					0.01	0.14	0.27	0.03	
Uniform Delay, d1	23.7		24.0					1.5	1.7	1.9	1.6	
Progression Factor	1.00		1.00					1.00	1.00	1.00	1.00	
Incremental Delay, d2	0.9		2.0					0.0	0.1	0.1	0.0	
Delay (s)	24.6		26.0					1.5	1.8	2.1	1.6	
Level of Service	C		C					A	A	A	A	
Approach Delay (s)		25.4			0.0			1.7			2.0	
Approach LOS		C			A			A			A	

Intersection Summary			
HCM Average Control Delay	5.7	HCM Level of Service	A
HCM Volume to Capacity ratio	0.29		
Actuated Cycle Length (s)	55.8	Sum of lost time (s)	8.0
Intersection Capacity Utilization	33.6%	ICU Level of Service	A
c Critical Lane Group			

Movement	EBL	EBT	EBR	WBL	WBT	WBR	NBL	NBT	NBR	SBL	SBT	SBR
Lane Configurations												
Ideal Flow (vphpl)	1900	1900	1900	1900	1900	1900	1900	1900	1900	1900	1900	1900
Total Lost time (s)				4.0		4.0	4.0	4.0			4.0	4.0
Lane Util. Factor				1.00		1.00	1.00	1.00			1.00	1.00
Frt				1.00		0.85	1.00	1.00			1.00	0.85
Flt Protected				0.95		1.00	0.95	1.00			1.00	1.00
Satd. Flow (prot)				1770		1583	1770	1863			1863	1583
Flt Permitted				0.95		1.00	0.95	1.00			1.00	1.00
Satd. Flow (perm)				1770		1583	1770	1863			1863	1583
Volume (vph)	0	0	0	44	0	726	7	40	0	0	271	105
Peak-hour factor, PHF	0.92	0.92	0.92	0.92	0.92	0.92	0.92	0.92	0.92	0.92	0.92	0.92
Adj. Flow (vph)	0	0	0	48	0	789	8	43	0	0	295	114
Lane Group Flow (vph)	0	0	0	48	0	789	8	43	0	0	295	114
Turn Type				Prot		custom	Prot					Perm
Protected Phases				3		8	5	2			6	
Permitted Phases						Free						6
Actuated Green, G (s)				7.1		29.2	0.5	14.1			9.6	9.6
Effective Green, g (s)				7.1		29.2	0.5	14.1			9.6	9.6
Actuated g/C Ratio				0.24		1.00	0.02	0.48			0.33	0.33
Clearance Time (s)				4.0		4.0	4.0	4.0			4.0	4.0
Vehicle Extension (s)				3.0		3.0	3.0	3.0			3.0	3.0
Lane Grp Cap (vph)				430		1583	30	900			612	520
v/s Ratio Prot				0.03		c0.12	0.00	0.02			0.16	
v/s Ratio Perm						0.38						0.07
v/c Ratio				0.11		0.50	0.27	0.05			0.48	0.22
Uniform Delay, d1				8.6		0.0	14.2	4.0			7.8	7.1
Progression Factor				1.00		1.00	1.00	1.00			1.00	1.00
Incremental Delay, d2				0.1		0.2	4.7	0.0			0.6	0.2
Delay (s)				8.7		0.2	18.9	4.0			8.4	7.3
Level of Service				A		A	B	A			A	A
Approach Delay (s)		0.0			0.7			6.4			8.1	
Approach LOS		A			A			A			A	

Intersection Summary			
HCM Average Control Delay	3.3	HCM Level of Service	A
HCM Volume to Capacity ratio	0.50		
Actuated Cycle Length (s)	29.2	Sum of lost time (s)	0.0
Intersection Capacity Utilization	25.5%	ICU Level of Service	A
c Critical Lane Group			

Movement	WBL	WBR	NBT	NBR	SBL	SBT
Lane Configurations						
Ideal Flow (vphpl)	1900	1900	1900	1900	1900	1900
Total Lost time (s)	4.0	4.0	4.0	4.0	4.0	4.0
Lane Util. Factor	0.97	1.00	1.00	1.00	1.00	1.00
Frt	1.00	0.85	1.00	0.85	1.00	1.00
Flt Protected	0.95	1.00	1.00	1.00	0.95	1.00
Satd. Flow (prot)	3433	1583	1863	1583	1770	1863
Flt Permitted	0.95	1.00	1.00	1.00	0.95	1.00
Satd. Flow (perm)	3433	1583	1863	1583	1770	1863
Volume (vph)	869	363	379	453	305	493
Peak-hour factor, PHF	0.92	0.92	0.92	0.92	0.92	0.92
Adj. Flow (vph)	945	395	412	492	332	536
Lane Group Flow (vph)	945	395	412	492	332	536
Turn Type		Perm		Perm	Prot	
Protected Phases	8		2		1	6
Permitted Phases		8		2		
Actuated Green, G (s)	19.2	19.2	16.5	16.5	14.0	34.5
Effective Green, g (s)	19.2	19.2	16.5	16.5	14.0	34.5
Actuated g/C Ratio	0.31	0.31	0.27	0.27	0.23	0.56
Clearance Time (s)	4.0	4.0	4.0	4.0	4.0	4.0
Vehicle Extension (s)	3.0	3.0	3.0	3.0	3.0	3.0
Lane Grp Cap (vph)	1068	493	498	423	402	1042
v/s Ratio Prot	c0.28		0.22		c0.19	0.29
v/s Ratio Perm		0.25		c0.31		
v/c Ratio	0.88	0.80	0.83	1.16	0.83	0.51
Uniform Delay, d1	20.2	19.5	21.3	22.6	22.7	8.4
Progression Factor	1.00	1.00	1.00	1.00	1.00	1.00
Incremental Delay, d2	8.9	9.1	10.8	96.5	13.0	0.4
Delay (s)	29.1	28.6	32.1	119.1	35.7	8.8
Level of Service	C	C	C	F	D	A
Approach Delay (s)	29.0		79.4			19.1
Approach LOS	C		E			B

Intersection Summary			
HCM Average Control Delay	40.9	HCM Level of Service	D
HCM Volume to Capacity ratio	0.96		
Actuated Cycle Length (s)	61.7	Sum of lost time (s)	12.0
Intersection Capacity Utilization	77.0%	ICU Level of Service	C
c Critical Lane Group			