# ATTACHMENT D – STRUCTURE ADVANCED PLANNING STUDY (APS)

# ADVANCE PLANNING STUDY MEMORANDUM
## FOR:
# SACRAMENTO RIVER BRIDGE AT RIO VISTA

## SR-12 REALIGNMENT / RIO VISTA BRIDGE PRELIMINARY STUDY

04-Sol-12-PM 19.17 to 03-Sac-12-PM 5.8

EA 04-4A490K

**Submitted to:**


Solano Transportation Authority

One Harbor Center, Suite 130

Suisun City, CA 94585

**Contact: Janet Adams, PE**

***Tel: (707) 424-6010*** Fax: (707) 424-6074


**Prepared by:**


AECOM

2020 L Street, Suite 300

Sacramento, CA 95811

**Contact: Steve Mislinski, PE**

***Tel: (916) 414-1580*** Fax: (916) 414-1557


***February 4, 2010***

# Table of Contents

**SECTION** **Page**

APS DESIGN MEMO ..... 1

**1** VICINITY MAP ..... 1

**2** INTRODUCTION ..... 1

**3** EXISTING STRUCTURES ..... 2

**4** VIABLE ALIGNMENTS AND STRUCTURE ALTERNATIVES ..... 2

**4.1** ALTERNATIVE 1 (No Build) ..... 2
**4.2** ALTERNATIVE 2 ..... 2
**4.3** ALTERNATIVE 3 ..... 3
**4.4** ALTERNATIVE 5 ..... 4
**4.4.1** Cast-in-Place Concrete Segmental ..... 4
**4.4.2** Cable Stayed with Steel Composite Spans ..... 4

**5** RETROFIT OF EXISTING STRUCTURE ..... 5

**6** CLEARANCES ..... 5

**7** FALSEWORK ..... 6

**8** IMPACT ON UTILITIES ..... 6

**9** AESTHETICS ..... 6

**10** FOUNDATION ISSUES ..... 6

**11** HAZARDOUS MATERIALS/WASTE ..... 8

**12** STRUCTURE COST: ..... 8

APPENDIX I: POTENTIAL CORRIDOR ALTERNATIVES ..... I

APPENDIX II: APS BRIDGE DRAWINGS ..... II

APPENDIX III: PRELIMINARY GEOTECHNICAL MEMORANDUM ..... III

# APS DESIGN MEMO

## 1 VICINITY MAP

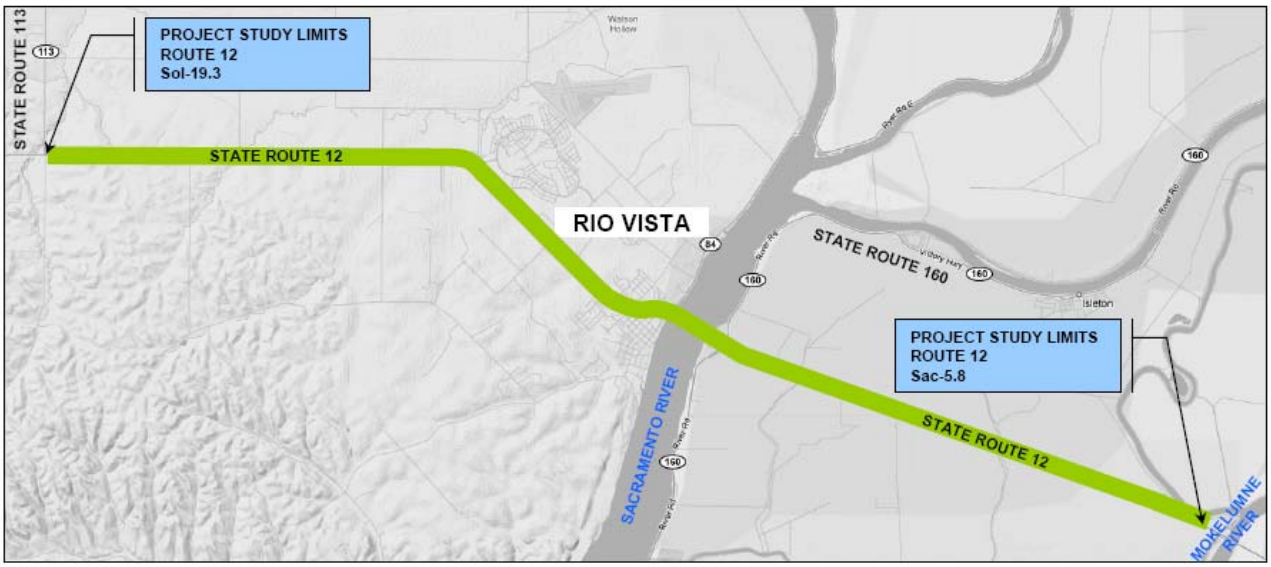


## 2 INTRODUCTION

The existing SR12 facility carries large volumes of traffic through the City of Rio Vista and over the Sacramento River. The project study limits extend easterly from State Route 113 (Sol-19.3) west of Rio Vista to the Mokelumne River (Sac-5.8) as shown in the Vicinity Map. The route passes adjacent to the City's central business district, and the river crossing is considered to be a "gateway" to both Solano County and the Bay Area due to its significance within the larger regional transportation system. As such, the route facilitates inter- and intra-regional traffic, as well as traffic between counties. The roadway is a 2 lane facility with narrow shoulders and lacks turning lanes at intersections. The existing Rio Vista Bridge on SR 12 at the Sacramento River has limited vertical clearance between the waterway and the structure which requires that the bridge be operated to allow passage of nearly all water vessels. These circumstances form a basis of need for additional highway capacity through Rio Vista and across the Sacramento River.

To alleviate these deficiencies, AECOM/LAN was selected to study alternatives to improve traffic capacity along SR 12 through Rio Vista and across the Sacramento River, to eliminate surface/river transportation conflicts, and to preserve traffic safety.

In August of 1998, the Rio Vista Bridge was renamed as the Helen Madere Memorial Bridge to pay tribute to the work performed by Helen Madere as the President of the Highway 12 Association to improve safety along Highway 12. The original bridge was designed by Joseph Strauss and was constructed in 1944. The Bridge was subsequently realigned, and a vertical lift span was added in 1960 to allow passage of cargo ships en route to the Port of Sacramento. The bridge is currently catalogued in the California Historic Bridge Inventory as a category 5 structure with no eligibility for listing in the National Register for Historic Places.

Based on the Peak Hour Volume Data Report available on Caltrans Traffic Website dated 06/05/2008, peak hour traffic volumes are currently 1,669 vph at AM peak hour and 1,850 vph at PM peak hour. When compared to the capacity of 1,800 vph that can be carried across the bridge, it is clear that the existing

facility is not adequate for current traffic demands. Peak traffic volumes for year 3030 are expected to be 2,506 vph at AM peak hour and 2,841 at PM peak hour which requires at least a 4-lane facility to operate at an acceptable LOS.

## 3 EXISTING STRUCTURES

The existing bridge carries a current ADT of 22,200 vehicles per day on two lanes over the Sacramento River. The structure is a through truss with a lift span over the main river navigation channel. Limited clearance between the bridge and the waterway requires the lift span to be operated to allow passage of modest recreational watercraft, and as many as 10 lifts per day, on average, is common during peak recreational periods based on Caltrans operation logs for 2008/2009. Bridge operation frequently results in significant traffic backups and unacceptable levels of service E/F.

With all alternative alignments and bridge types, the existing bridge is assumed to be removed.

## 4 VIABLE ALIGNMENTS AND STRUCTURE ALTERNATIVES

Based on review of the previously studied alignments and current constraints, it is recommended that three of the corridor alternatives shown in the Potential Corridor Alternatives Exhibit in Appendix I be further assessed and developed in more detail. It has been proposed that Alternative 4 be removed from further consideration based on several issues, impacts and constraints that would pose difficulties in funding, permitting and constructing a bypass and river crossing on this alignment.

The Alternative 4 alignment crosses wetlands on the west side of the river. As such, this alternative would result in greater environmental impact compared to other alternatives. Additionally, to minimize environmental impacts, the river bridge would need to be extended beyond the wetlands which would result in a significantly longer bridge (10,500 feet) and higher associated cost. Furthermore, a bridge along this alignment would cross the river very close to the confluence of the Deep Water Channel, the Sacramento River and Steamboat Slough. As documented in a meeting with the US Coast Guard, San Francisco Bar Pilots and the Port of West Sacramento, the turbulent flows that occur in this vicinity of the river combined with a bridge crossing/navigational opening would pose a navigation hazard due to the increased difficulty of navigating large ships through this area. Other issues associated with this alternative include potential for poor foundation soils on the west side of the river, challenges in providing access to the City and impacts to the Rio Vista Airport. An alignment to the north of the airport would result in limited access to the City due to the presence of wetlands and the airport which forms a barrier between the City and the road alignment. Moreover, an alignment to the north of the airport would effectively constrain the airport and would preclude future airport expansion. In addition, the elevated approach embankment and bridge for Alternative 4 is in the proximity of the airport landing flight path. The proximity of a high level bridge to the airport flight path, coupled with environmental impacts and potential impacts to ship safety could pose significant challenges in obtaining permits for construction.

### 4.1 ALTERNATIVE 1 (No Build)

No build option, with the existing bridge remaining unchanged. The "no build" option would not address the need for increased capacity across the bridge.

### 4.2 ALTERNATIVE 2

The Alignment is located within the existing SR12 corridor and matches the existing SR12 alignment except near and over the river where it is offset to the north to allow space for staging that will be required to keep the existing lanes operational during construction.

Feasible structures for the river crossing for this alternative include a mid-level, moveable bridge and a tunnel. A high level bridge is not considered feasible at this location due to the adverse visual impact of an elevated roadway/viaduct through the center of Rio Vista, as well as the associated impacts to local access and local access points. A disadvantage of a mid-level, moveable bridge is that it will still need to be operated for some recreational craft and all larger shipping traffic. Although a tunnel would require a depressed roadway approach, local access could be more easily maintained and even enhanced with lid(s) on the depressed roadway that can be used for local road crossings, parking and recreational use. In addition to improved access, a tunnel would avoid construction in the river and associated environmental impacts, and impacts to shipping/boating would be eliminated along with traffic disruptions that occur when a lift bridge is operated. Because of the dissimilar nature of a tunnel compared to a bridge crossing and the higher construction and maintenance costs associated with tunnels, the tunnel alternative is documented in a separate study memorandum.

For this study, the estimated bridge type for the main span is a steel truss superstructure lift bridge with an orthotropic deck to reduce weight. The approaches over water are cast-in-place or precast prestressed concrete segmental bridges and cast-in-place prestressed (CIP/PS) box girder bridge over land on the western approach. The CIP/PS type is used on the western approach to facilitate tie-in of the WB Off-ramp bridge. The eastern approach to the lift bridge is segmental construction to the east end of the bridge.

Steel I girder superstructure initial costs are competitive with concrete construction; however, long-term maintenance costs can be considerably higher. As such, for the purpose of this feasibility study, the approach spans are considered as concrete superstructure for cost analysis. Following are some advantages and disadvantages for the estimated bridge type.

Advantages

- Low maintenance for concrete portions.
- Low profile, less visual obstructions.

Disadvantages.

- High cost for the main lift bridge.
- Continuous maintenance costs for the lift equipment and painting of steel members.

## 4.3 ALTERNATIVE 3

This alternative follows a route to the north of the existing SR12 and takes a northerly departure from SR12 east of Azevedo Road and then turns southeasterly following the Airport Road alignment to the south of the airport before crossing the river and connecting back into the existing SR12 west of the Mokelumne River.

This alternative would include a high level bridge, as the main advantage of high level crossing is that all river traffic can pass without conflicting with vehicular traffic. Feasible structure types at this location include segmental concrete and orthotropic steel. Towers for a cable stayed bridge could pose issues with the airport landing flight paths.

For this study, the preferred type is a CIP/PS concrete balanced cantilever segmental type bridge similar to the Benicia-Martinez Bridge over the water. Over land along the approaches, where shorter spans can be utilized, CIP/PS concrete box girder bridge is proposed.

Steel I girder superstructure initial costs are competitive with concrete construction; however, long-term maintenance costs can be considerably higher. As such, for the purpose of this feasibility study, the approach spans are considered as concrete superstructure for cost analysis. Following are some advantages and disadvantages for the estimated bridge type.

Advantages

- Low maintenance for concrete portions.
- Long segmental spans reduce the number of piers in the river and related environmental impacts.

Disadvantages.

- Higher cost for the main segmental spans vs. traditional cast-in-place PS concrete box girder construction.

## 4.4 ALTERNATIVE 5

This alignment alternative is located to the south of the City of Rio Vista and takes advantage of the river bluffs on the west side of the river. The alignment departs from the existing SR12 alignment west of Azevedo Road and turns southeasterly passing to the south of the planned Del Rio Hills development along an alignment parallel to Emigh Road. The alignment crosses the City of Rio Vista waste-water treatment plant before crossing the river, passing to the south of the Duck Island RV Park and connecting back into the existing SR12 alignment west of the Mokelumne River.

Like Alternatives 3 and 4, this alternative would include a high level bridge to avoid conflicts between roadway and shipping traffic. Feasible structure types at this location include segmental concrete, orthotropic steel and cable stayed bridges. For this study, two alternative bridge types are estimated.

### 4.4.1 Cast-in-Place Concrete Segmental

The first is a CIP/PS concrete balanced cantilever segmental type bridge similar to the Benicia-Martinez Bridge over the water and along the western approach over the waste-water treatment plant where falsework heights would not be practical for construction. Over land along the approaches, where shorter spans can be utilized and falsework heights are constructable, CIP/PS concrete box girder bridge is proposed.

The main balanced cantilever segmental spans vary in depth from 25 feet at the piers to 12 feet at mid spans. The expansion joints at the mid spans consist of either large diameter steel pipes similar to the Bay Bridge or box beam with similar supports. The cast-in-place approach span expansion joints consist of standard strip seal or modular joints depending on the movement rating.

Steel I girder superstructure initial costs are competitive with concrete construction; however, long-term maintenance costs can be considerably higher. As such, for the purpose of this feasibility study, the approach spans are considered as concrete superstructure for cost analysis. Following are some advantages and disadvantages for the estimated bridge type.

Advantages (vs. Steel Cable Stayed)

- Low maintenance for concrete portions.
- Cleaner appearance.
- Segmental spans need no falsework support from ground.
- Long segmental spans reduce the number of piers in the river and related environmental impacts.
- Lower approach square foot costs for CIP/PS Box Girder vs. Steel I Girder.
- Simplified framing for the support of the ramp bridges.

Disadvantages.

- Longer length of the main cast-in-place PS segmental concrete box girder construction portions.
- Heavier structure produces more displacement demand vs. steel superstructure.
- Higher foundation costs.

### 4.4.2 Cable Stayed with Steel Composite Spans

The second is a cable stayed bridge comprised of a steel superstructure with concrete deck and concrete pylons over the water with multi-span composite steel I beams and concrete deck for the approach spans.

The cable stayed spans superstructure consists of steel edge girders supported by two vertical planes of stay cables with a “harped” arrangement. The edge girders are connected with floor beams transversely. The deck consists of precast concrete panels connected together with cast-in-place stitches.

The pylons are vertical without a cross beam above the roadway for simplified construction. The pylons are connected transversely by a concrete cross beam at deck level. The three-pylon configuration requires increased longitudinal stiffness to control deck deflections under dissymmetrical loadings. Therefore the pylons are supported on twin columns longitudinally. The twin columns also provide for greater flexibility under temperature variations for the outside pylons. The upper pylons house the stay cable anchorages and access will be required for maintenance. Horizontal stay cable forces are resisted either with post-tensioning or with structural steel members.

The construction methods for the cable stayed spans are typical for this type of structure: the foundations and concrete pylons are built first, deck erection proceeds then in balanced cantilever. Steel “grillages” made of edge girder sections and floor beams are lifted from barges and assembled with bolted connections to the previously completed deck. The stay cables are then connected to the extremity of the grillage and partially stressed. After that, the concrete panels are erected and stitches poured. After the stitch concrete has reached the required strength, the stay cables are stressed to the final force. Stay cable stressing normally takes place from the pylon anchorages so that the connections of the stay cables to the edge girders can be simplified. Following are some advantages and disadvantages for the estimated bridge type.

Advantages (vs. Conc. Segmental)

- Competitive pricing for high level steel structure vs. segmental concrete construction per square foot.
- Signature bridge type.
- Steel spans need no falsework support from ground.
- Lighter weight superstructure produces less seismic displacement.
- Lower foundation costs.
- Fewer Pier supports in the river, thus reduced environmental impacts..
- Wider clear navigational width.

Disadvantages.

- Higher initial cost per square foot for cable stayed spans.
- Higher continuous maintenance costs for steel members and cable stays.
- More visual impact.
- Steel I Girder Bridge square foot cost higher than traditional CIP/PS Box Girder bridges.
- Larger foundations for the cable stay pylons.
- High reach cranes or tower cranes required for tall approach spans.
- Difficult framing for the supports of the ramp bridges.

## 5 RETROFIT OF EXISTING STRUCTURE

The reason for the feasibility study is to increase the capacity of the river crossing along the stretch of SR 12. The existing bridge clearance in the down position is unacceptable and for this reason, replacement of the bridge is proposed.

## 6 CLEARANCES

During construction, a 15-foot minimum vertical clearance will be maintained at all traffic openings at undercrossings and overcrossings. (see Section 7).

A minimum final vertical clearance of 15-foot clearance shall be provided at undercrossings and 16.5 feet at overcrossings.

The main navigation channel clearance shall be 148-feet vertical and 440-feet horizontal for the high lever river crossings and 50-feet vertical clearance at the mid-level crossing with a lift span over the navigation channel.

## 7 FALSEWORK

For spans over the river, falsework is not recommended due to shipping use and environmental impacts. For spans on land, falsework is acceptable, however, because of the weak soils near the river, proper support is required to prevent settlement during construction. All openings will maintain a minimum vertical clearance of 15 feet during construction for roadways.

The steel composite alternatives will alleviate the need for falsework for the spans.

Tall falsework heights (over 100 feet) are not recommended, therefore, segmental structures will extend over land to a point where falsework can be safely used.

## 8 IMPACT ON UTILITIES

Overhead and underground utilities may be impacted during construction and final design shall investigate and mitigate such impacts. Existing utilities may be relocated to a new bridge and new lines can be carried on the new bridge structure.

## 9 AESTHETICS

Aesthetic features of the bridge should be coordinated with Caltrans, the City, local community and Solano, Sacramento and San Joaquin Counties.

## 10 FOUNDATION ISSUES

The various bridge locations for the studied alignment alternatives present varying underlying soil characteristics. Generally all locations will require deep foundations. Based on the location of the bridge foundations with respect to the alignment alternatives, the foundation issues are summarized in the following table:

| Bridge Location | Subsurface Materials | Bedrock/ Groundwater | Foundation Types | Max EQ/ Accel. | Max ARS |
|---|---|---|---|---|---|
| West of Sacramento River and South and West of Rio Vista | West of downtown Rio Vista, generally compact-very stiff gravel, sand, cult and clay.<br>At/near the west approach of existing bridge, upper 30-40ft consists of peaty soils (weak and highly compressible) overlying more competent "mineral" soils (sand/silt/clay). | Bedrock not expected to be encountered.<br>Free groundwater expected at least seasonally. | 100 ton piles consisting of 14" precast or 16" dia steel shells, CIDH/CISS piles supported footing at abutments.<br>Bent foundations may consist of large diameter CISS or prestressed concrete tubes driven open ended. | Moment Magnitude is 7.0, Peak Ground Accel = 0.4g. Distance to fault is 7.6mi. | 1.02 g |

| Bridge Location | Subsurface Materials | Bedrock/ Groundwater | Foundation Types | Max EQ/ Accel. | Max ARS |
|---|---|---|---|---|---|
| West of Sacramento River and North of Rio Vista | Variable with soils mapped as hydraulic -dredge soils and beat and mud of tidal wetlands and waterways (depth unknown but anticipated to be on the order of 5 ft or more) underlain by Pleistocene-aged alluvium capable of supporting heavy concentrated foundation loads. | Bedrock not expected to be encountered. Groundwater expected at shallow depths | 100 ton piles consisting of 14" precast or 16" dia steel shells, CIDH/CISS piles supported footing at abutments.<br>Bent foundations may consist of large diameter CISS or prestressed concrete tubes driven open ended. | Moment Magnitude is 7.0, Peak Ground Accel = 0.4g. Distance to fault is 7.6mi. | 1.02 g |
| Sacramento River at Existing Bridge Location | Upper 30 ft (below channel grade) consists of mud and loose sand underlain by 35ft of compact-very stiff sand and clay, in turn underlain by very dense sand and very hard clay. Upper soils are potentially subject to scour. | Bedrock not expected to be encountered. Groundwater expected at shallow depths | 100 ton piles consisting of 14" precast or 16" dia steel shells, CIDH/CISS piles supported footing at abutments.<br>Bent foundations may consist of large diameter CISS (6'-8') or prestressed concrete tubes driven open ended. | Moment Magnitude is 7.0, Peak Ground Accel = 0.4g. Distance to fault is 7.6mi. | 1.02 g |
| East of Sacramento River (Brannan Island) | Upper layers consist of 15-25 ft of weak, compressible peaty soils overlying another 5-10 ft of soft clay grading downward to compact-dense sand and/or very stiff-hard clay. Peaty soils may extend as far as 35-40ft below grade. | Bedrock not expected to be encountered. Groundwater expected at shallow depths. | 100 ton piles consisting of 14" precast or 16" dia steel shells, CIDH/CISS piles supported footing at abutments.<br>Bent foundations may consist of large diameter CISS or prestressed concrete tubes driven open ended. | Moment Magnitude is 7.0, Peak Ground Accel = 0.4g. Distance to fault is 7.6mi. | 1.02 g |

In general, materials anticipated to be encountered along proposed individual alignments and different alternates vary significantly and are expected to affect the bridge alternatives and alignments differently. Typical surficial materials are not considered suitable for direct support of bridge foundations but may be appropriated for support of limited embankment or roadway fill loading. Considerations is expected to be required for surficial soils compressibility and settlement under significantly increased fill or embankment loading; use of lightweight fill or preconsolidation should be considered at embankment locations susceptible to settlement.

Other than the distortion and local instability of embankment and or levee fills or slopes and potential for liquefaction in loose sands, the risk of secondary seismic effects appears low.

## 11 HAZARDOUS MATERIALS/WASTE

Reports for the SR-12 earthwork in 1954 east of the river indicate that native soils are highly corrosive, however recent testing is not available at the project sites. Testing will be performed during PS&E.
The presence of hazardous materials has yet to be determined, however, west of the river there are many natural gas well sites. It is recommended that investigations be performed during PS&E.

## 12 STRUCTURE COST:

The construction cost for the studied structures associated with the alignment alternatives are shown below. These construction costs include wingwalls and retaining walls retaining embankment at abutments, but not retaining walls that are between bridges or retaining fill elsewhere. Costs below include Time Related Overhead at 10%, Mobilization at 10% and Contingencies at 25% (see Section 3 for more detail).

| ALIGNMENT ALTERNATIVE 2 | | | |
|---|---|---|---|
| Bridge Name | Br. No. | Bridge Type | Structure Estimated Cost |
| Sacramento River Bridge (Lift Span) | TBD | Steel Lift Truss at navigation channel | $ 161,656,300 |
| Sacramento River Bridge (CIP/PS Segmental East and West Approaches) | TBD | CIP/PS Concrete Segmental Construction | $ 206,790,700 |
| Sacramento River Bridge (CIP/PS Box Girder Approaches) | TBD | CIP/PS Concrete Box Girder | $ 29,534,700 |
| SR-12 WB Off-Ramp | TBD | CIP/PS Concrete Box Girder | $ 3,482,000 |
| Remove Existing Bridge | 50-0475 | Steel Plate Girder approaches with Steel lift truss at navigation channel | $ 10,000,000 |
| **Total Alignment Alternative 2 Structure Cost** | | | **$ 411,463,700** |

| ALIGNMENT ALTERNATIVE 3 | | | |
|---|---|---|---|
| Bridge Name | Br. No. | Bridge Type | Structure Estimated Cost |
| Sacramento River Bridge (High-Level Main Spans) | TBD | CIP/PS Concrete Segmental Construction | $ 326,758,100 |
| Sacramento River Bridge (West Approach) | TBD | CIP/PS Concrete Box Girder | $ 31,326,500 |
| Sacramento River Bridge (East Approach) | TBD | CIP/PS Concrete Box Girder | $ 22,343,300 |
| Tomato Slough Left Bridge | TBD | CIP Reinforced Concrete Slab | $ 921,700 |
| Tomato Slough Right Bridge | TBD | CIP Reinforced Concrete Slab | $ 921,700 |
| Remove Existing Bridge | 50-0475 | Steel Plate Girder approaches with Steel lift truss at navigation channel | $ 10,000,000 |
| **Total Alignment Alternative Structure Cost** | | | **$ 392,271,300** |

| ALIGNMENT ALTERNATIVE 5, SEGMENTAL BRIDGE ALT. | | | |
|---|---|---|---|
| Bridge Name | Br. No. | Bridge Type | Structure Estimated Cost |
| Sacramento River Bridge (High-Level Main Spans) | TBD | CIP/PS Concrete Segmental Construction | $ 296,496,100 |
| Sacramento River Bridge (West Approach) | TBD | CIP/PS Concrete Box Girder | $ 14,237,300 |
| Sacramento River Bridge (East Approach) | TBD | CIP/PS Concrete Box Girder | $ 37,943,100 |
| WB On-Ramp | TBD | CIP Reinforced Concrete Slab | $ 1,666,200 |
| EB Off-Ramp | TBD | CIP Reinforced Concrete Slab | $ 2,450,300 |
| EB On-Ramp | TBD | CIP Reinforced Concrete Slab | $ 2,058,300 |
| Azevedo Road OC | TBD | CIP/PS Concrete Box Girder | $ 3,619,000 |
| Amerada Road UC R/L | TBD | CIP/PS Concrete Box Girder | $ 6,720,000 |
| Amerada Road Extension OC | TBD | CIP/PS Concrete Box Girder | $ 2,840,000 |
| Montezuma Hills Road OC | TBD | CIP/PS Concrete Box Girder | $ 3,055,000 |
| Facility Access Road UC | TBD | CIP/PS Concrete Box Girder | $ 4,150,000 |
| Tomato Slough Bridge | TBD | CIP Reinforced Concrete Slab | $ 6,162,800 |
| Remove Existing Bridge | 50-0475 | Steel Plate Girder approaches with Steel lift truss at navigation channel | $ 10,000,000 |
| **Total Alignment Alternative Structure Cost** | | | **$ 391,398,100** |

| ALIGNMENT ALTERNATIVE 5, CABLE STAYED BRIDGE ALT. | | | |
|---|---|---|---|
| Bridge Name | Br. No. | Bridge Type | Structure Estimated Cost |
| Sacramento River Bridge (Cable Stay Spans) | TBD | Cable Stayed Superstructure with steel grillage and concrete deck | $ 268,734,400 |
| Sacramento River Bridge (West Approach) | TBD | Composite Steel I Girder with Concrete deck. | $ 60,191,600 |
| Sacramento River Bridge (East Approach) | TBD | Composite Steel I Girder with Concrete deck. | $ 65,364,700 |
| WB On-Ramp | TBD | CIP Reinforced Concrete Slab | $ 1,666,200 |
| EB Off-Ramp | TBD | CIP Reinforced Concrete Slab | $ 2,450,300 |
| EB On-Ramp | TBD | CIP Reinforced Concrete Slab | $ 2,058,300 |
| Azevedo Road OC | TBD | CIP/PS Concrete Box Girder | $ 3,691,000 |
| Amerada Road UC R/L | TBD | CIP/PS Concrete Box Girder | $ 6,720,000 |
| Amerada Road Extension OC | TBD | CIP/PS Concrete Box Girder | $ 2,840,000 |
| Montezuma Hills Road OC | TBD | CIP/PS Concrete Box Girder | $ 3,055,000 |
| Facility Access Road UC | TBD | CIP/PS Concrete Box Girder | $ 4,150,000 |
| Tomato Slough Bridge | TBD | CIP Reinforced Concrete Slab | $ 6,162,800 |
| Remove Existing Bridge | 50-0475 | Steel Plate Girder approaches with Steel lift truss at navigation channel | $ 10,000,000 |
| **Total Alignment Alternative Structure Cost** | | | **$ 437,012,300** |

# APPENDIX I: POTENTIAL CORRIDOR ALTERNATIVES

# SR-12 REALIGNMENT/ RIO VISTA BRIDGE PRELIMINARY STUDY

VERNAL POOL RECOVERY PLAN CORE AREAS

McCORMACK ROAD

POTENTIAL GIANT GARTER SNAKE HABITAT AREAS IN ZONE 1

GIANT GARTER SNAKE CONSERVATION AREA

ROUTE 12

WETLANDS/ WATERS

BURROWING OWL

AIRPORT BLVD

WETLAND

CHURCH ROAD

WOODLAND WETLAND

WETLANDS

RIVER ROAD

OPEN WATER HABITATS

RIPARIAN WOODLAND

HISTORICAL FENCE

ARCHAEOLOGICAL SITE

2 CEMETERIES

POSSIBLE HISTORICAL DISTRICT

HISTORICAL CULTURAL LANDSCAPE ASSOCIATED WITH AGRICULTURE

EMIGH ROAD

DELTA MARINA YACHT HARBOR

SACRAMENTO RIVER

RIVER ROAD

OLD ARMY BASE US COAST GUARD STATION

CITY OF RIO VISTA WASTEWATER PLANT

DUCK ISLAND RV PARK

SOLANO COUNTY

SACRAMENTO COUNTY

ROUTE 12

CALIFORNIA TIGER SALAMANDER POTENTIAL RANGE

0 500 1000 2000 3000 4000

## LEGEND

- ALT 2 (EXISTING ALIGNMENT)
- ALT 3 (AIRPORT BLVD)
- ALT 4 (NORTHERN ALIGNMENT)
- ALT 5 (SOUTHERN ALIGNMENT)
- COUNTY LIMITS
- PRIMARY DELTA ZONE
- SECONDARY DELTA ZONE
- LAFCO SPHERE OF INFLUENCE
- WETLAND
- OPEN WATER HABITATS
- GIANT GARTER SNAKE CONSERVATION AREA
- CALIFORNIA TIGER SALAMANDER POTENTIAL RANGE
- VERNAL POOL RECOVERY PLAN CORE AREAS
- POTENTIAL GIANT GARTER SNAKE HABITAT AREAS IN ZONE 1
- SHILOH III WIND PROJECT

STA Solano Transportation Authority

AECOM

# EXHIBIT

## PRELIMINARY STUDY POTENTIAL CORRIDOR ALTERNATIVES

# APPENDIX II: APS BRIDGE DRAWINGS

PREPARED FOR THE STATE OF CALIFORNIA - DEPARTMENT OF TRANSPORTATION

| DIST. | COUNTY | ROUTE | POST MILES TOTAL PROJECT |
|---|---|---|---|
| 04 | SOL | 12 | - |

SOLANO TRANSPORTATION AUTHORITY
ONE, HARBOUR CENTER, SUITE 130,
SUISUN CITY, CALIFORNIA 94585

LIM & NASCIMENTO ENGINEERING
11344 COLOMA ROAD, SUITE 590
GOLD RIVER, CALIFORNIA 95670

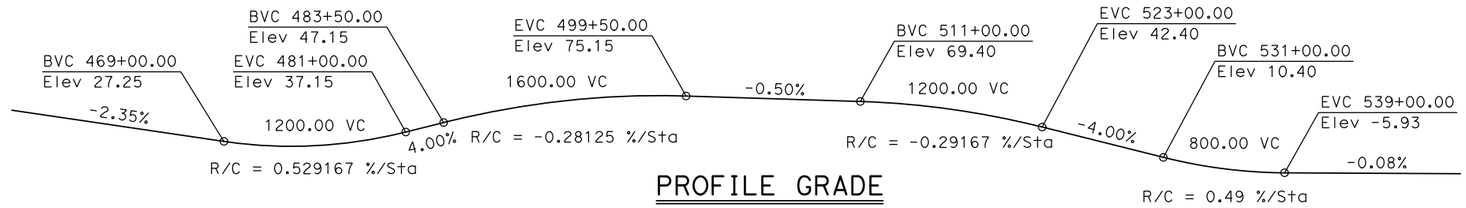


## PROFILE GRADE

No scale

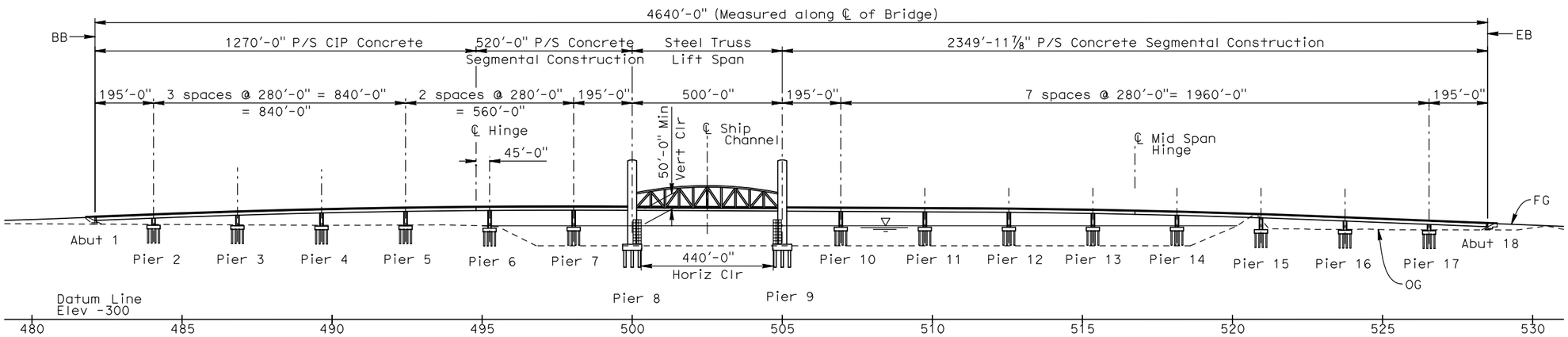


## DEVELOPED ELEVATION

1"=200'

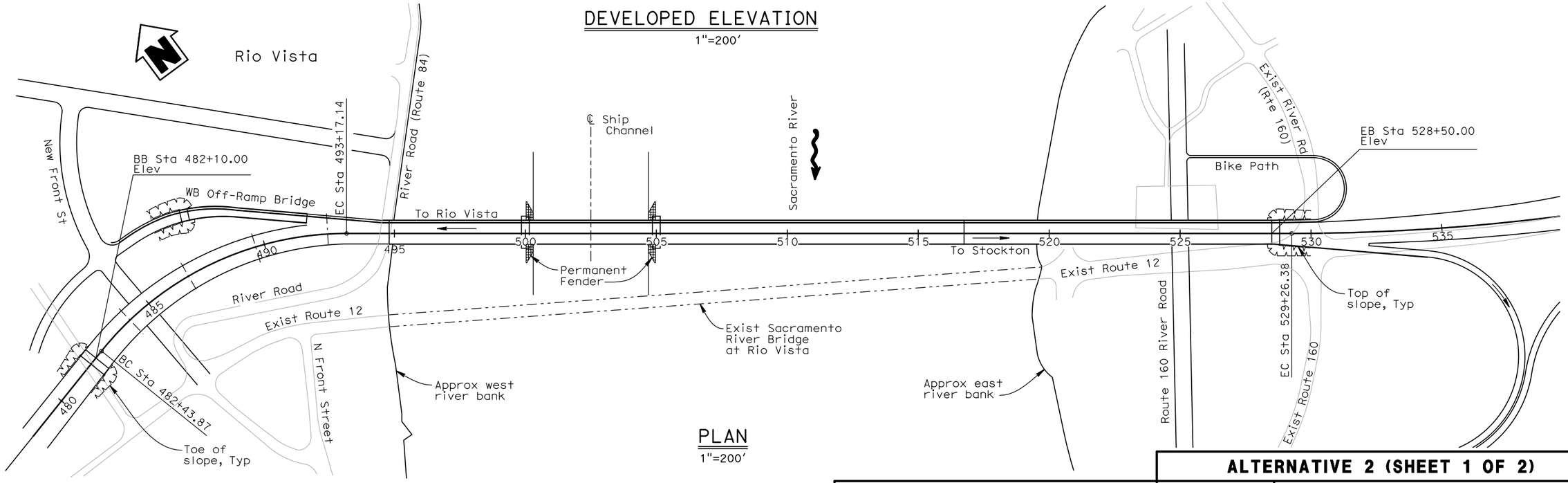


## PLAN

1"=200'

| | | |
|---|---|---|
| DESIGNED BY R. Price | DATE | |
| DRAWN BY C. Lee | DATE | |
| CHECKED BY | DATE | |
| APPROVED | DATE | |

S. Mislinski
PROJECT ENGINEER

**ALTERNATIVE 2 (SHEET 1 OF 2)**

**PLANNING STUDY**

SACRAMENTO RIVER BRIDGE AT RIO VISTA

| | |
|---|---|
| BRIDGE NO. TBD | CU 04 |
| SCALE: As shown | EA 4A490K |

DESIGN OVERSIGHT X

SIGN OFF DATE

ADVANCE PLANNING STUDY SHEET (ENGLISH) (REV. 2/25/05)

FILE => U:\BRIDGE\STA0701 Rio Vista Bridge\Planning study\2-expressway bridge-ALT 2.dgn

USERNAME => PriceR1 DATE PLOTTED => 1/29/2010 TIME PLOTTED => 2:19:28 PM

PREPARED FOR THE STATE OF CALIFORNIA - DEPARTMENT OF TRANSPORTATION

| DIST. | COUNTY | ROUTE | POST MILES TOTAL PROJECT |
|---|---|---|---|
| 04 | SOL | 12 | - |

SOLANO TRANSPORTATION AUTHORITY
ONE, HARBOUR CENTER, SUITE 130,
SUISUN CITY, CALIFORNIA 94585

LIM & NASCIMENTO ENGINEERING
11344 COLOMA ROAD, SUITE 590
GOLD RIVER, CALIFORNIA 95670

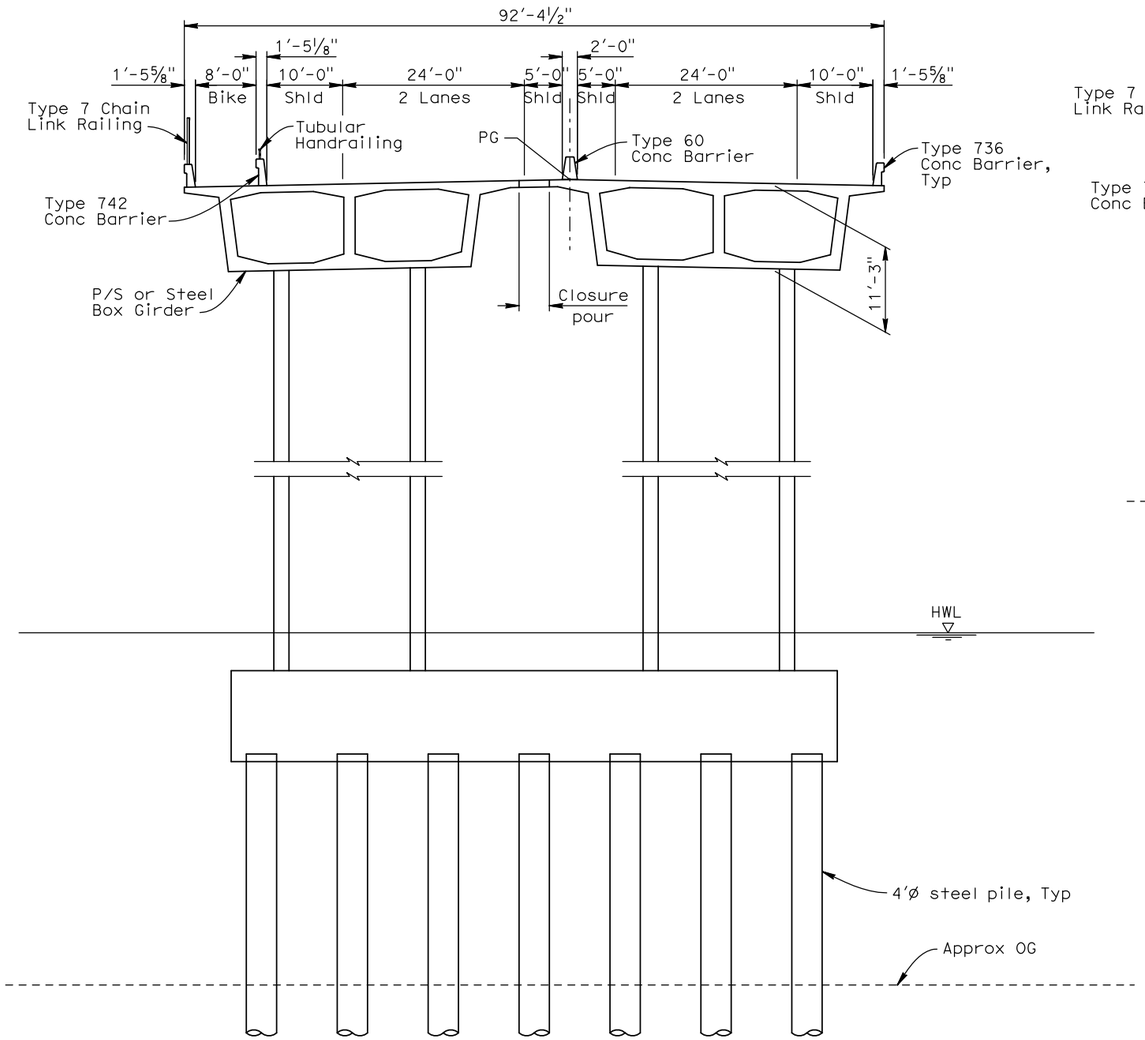


## TYPICAL SECTION

1"=10'

(P/S CONCRETE SEGMENTAL SPANS)

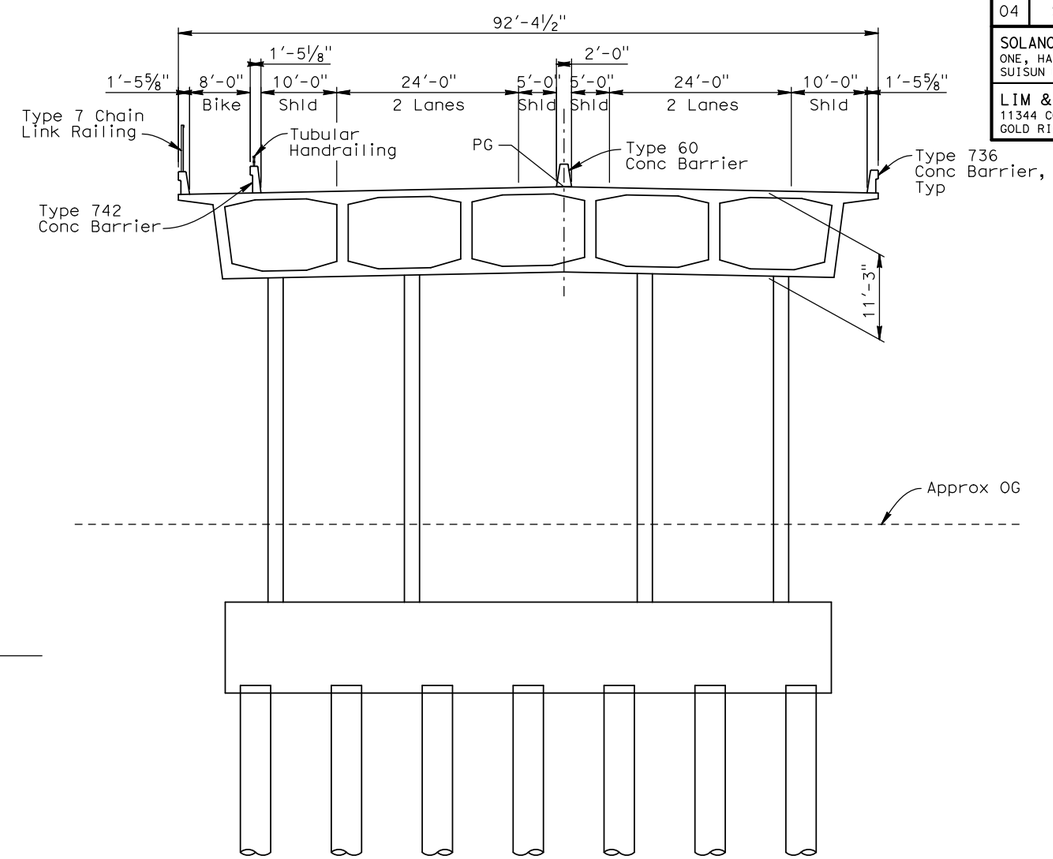


## TYPICAL SECTION

1"=10'

(CIP P/S CONCRETE SPANS)

Note:
Cost / sqft does not include bridge removal.

## STEEL TRUSS LIFT SPAN

| | |
|---|---|
| DATE OF ESTIMATE | 1-29-2010 |
| BRIDGE REMOVAL | = 0 |
| STRUCTURE DEPTH | = Truss |
| LENGTH | = 500'-0" |
| WIDTH | = 92'-4½" |
| AREA | = 46,188 sq ft |
| COST/ □FT INCLUDING 10% MOBILIZATION & 25% CONTINGENCY | = $3,500.00 |
| TOTAL COST | = $161,656,300 |

## CIP SEGMENTAL CONC APPR

| | |
|---|---|
| DATE OF ESTIMATE | 1-29-2010 |
| BRIDGE REMOVAL | = 101,140 sq ft |
| STRUCTURE DEPTH | = 11'-3" |
| LENGTH | = 2870'-0" |
| WIDTH | = 92'-4½" |
| AREA | = 265,116 sq ft |
| COST/ □FT INCLUDING 10% MOBILIZATION & 25% CONTINGENCY | = $780.00 |
| SUB TOTAL COST | = $206,790,700 |
| BRIDGE REMOVAL | = $10,000,000 |
| TOTAL COST | = $216,790,700 |

## CIP P/S CONC APPROACH SPANS

| | |
|---|---|
| DATE OF ESTIMATE | 1-29-2010 |
| BRIDGE REMOVAL | = 0 |
| STRUCTURE DEPTH | = 11'-3" |
| LENGTH | = 1270'-0" |
| WIDTH | = 103'-4¼" Avg |
| AREA | = 131,265 sq ft |
| COST/ □FT INCLUDING 10% MOBILIZATION & 25% CONTINGENCY | = $225.00 |
| TOTAL COST | = $29,534,700 |

SUM TOTAL ALL SPANS= $407,981,700

DESIGN OVERSIGHT X

SIGN OFF DATE

| | | |
|---|---|---|
| DESIGNED BY R. Price | DATE | |
| DRAWN BY C. Lee | DATE | S. Mislinski PROJECT ENGINEER |
| CHECKED BY | DATE | |
| APPROVED | DATE | |

**ALTERNATIVE 2 (SHEET 2 OF 2)**

**PLANNING STUDY**

SACRAMENTO RIVER BRIDGE AT RIO VISTA

| | |
|---|---|
| BRIDGE NO. TBD | CU 04 |
| SCALE: As shown | EA 4A490K |

USERNAME => PriceR1 DATE PLOTTED => 1/29/2010 TIME PLOTTED => 2:19:48 PM

ADVANCE PLANNING STUDY SHEET (ENGLISH) (REV. 2/25/05)

FILE => U:\BRIDGE\STA0701 Rio Vista Bridge\Planning study\2-expressway bridge-ALT 2.dgn

PREPARED FOR THE STATE OF CALIFORNIA - DEPARTMENT OF TRANSPORTATION

| DIST. | COUNTY | ROUTE | POST MILES TOTAL PROJECT |
|---|---|---|---|
| 04 | SOL | 12 | - |

SOLANO TRANSPORTATION AUTHORITY
ONE, HARBOUR CENTER, SUITE 130,
SUISUN CITY, CALIFORNIA 94585

LIM & NASCIMENTO ENGINEERING
11344 COLOMA ROAD, SUITE 590
GOLD RIVER, CALIFORNIA 95670

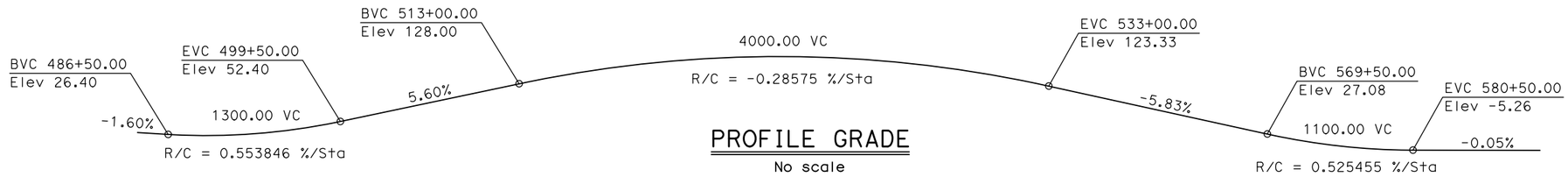


PROFILE GRADE
No scale

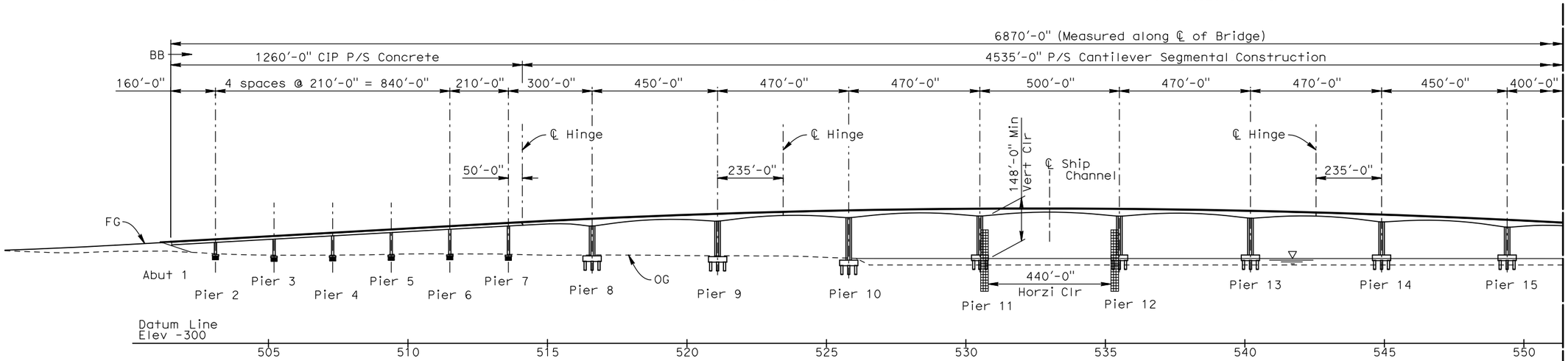


ELEVATION
1"=200'

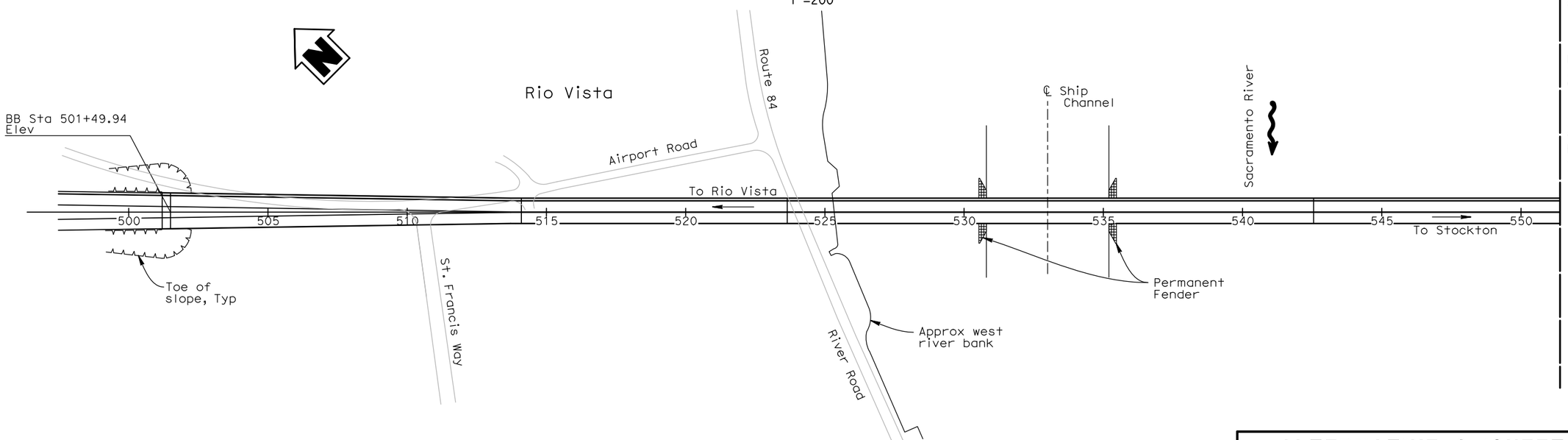


PLAN
1"=200'

| | | |
|---|---|---|
| DESIGNED BY R. Price | DATE | |
| DRAWN BY C. Lee | DATE | S. Mislinski PROJECT ENGINEER |
| CHECKED BY | DATE | |
| APPROVED | DATE | |

ALTERNATIVE 3 (SHEET 1 OF 3)

PLANNING STUDY

SACRAMENTO RIVER BRIDGE AT RIO VISTA

| | |
|---|---|
| BRIDGE NO. TBD | CU 04 |
| SCALE: As shown | EA 4A490K |

DESIGN OVERSIGHT X

SIGN OFF DATE

ADVANCE PLANNING STUDY SHEET (ENGLISH) (REV. 2/25/05)

FILE => U:\BRIDGE\STA0701 Rio Vista Bridge\Planning study\6-freeway bridge-ALT 3.dgn

USERNAME => PriceR1 DATE PLOTTED => 1/29/2010 TIME PLOTTED => 2:20:20 PM

PREPARED FOR THE STATE OF CALIFORNIA - DEPARTMENT OF TRANSPORTATION

| DIST. | COUNTY | ROUTE | POST MILES TOTAL PROJECT |
|---|---|---|---|
| 04 | SOL | 12 | - |

SOLANO TRANSPORTATION AUTHORITY
ONE, HARBOUR CENTER, SUITE 130,
SUISUN CITY, CALIFORNIA 94585

LIM & NASCIMENTO ENGINEERING
11344 COLOMA ROAD, SUITE 590
GOLD RIVER, CALIFORNIA 95670

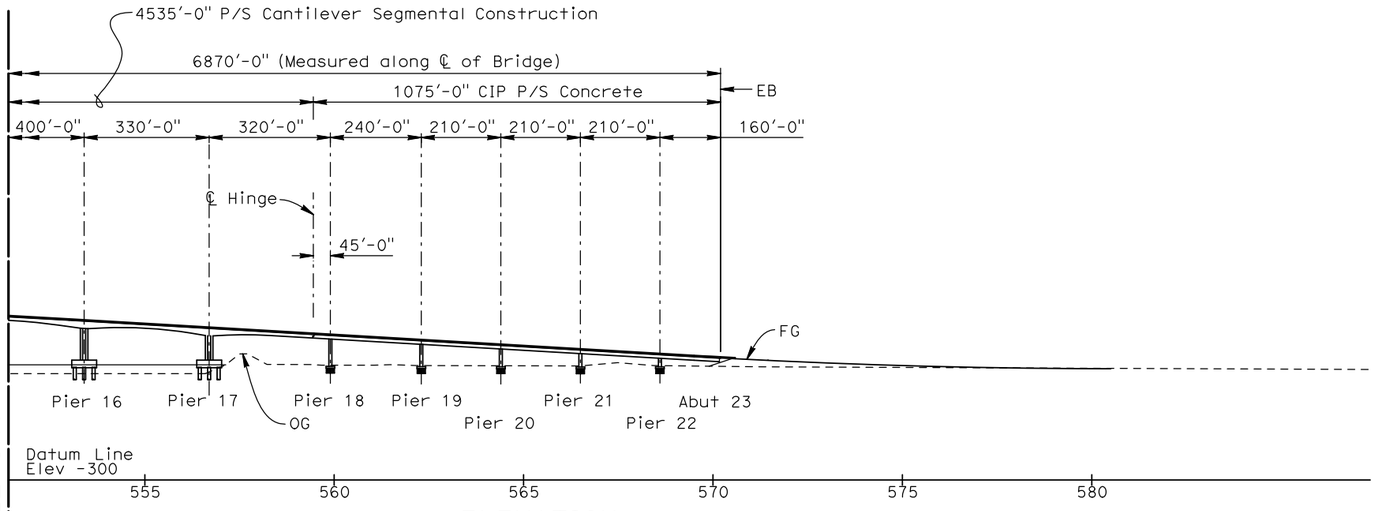


ELEVATION
1"=200'

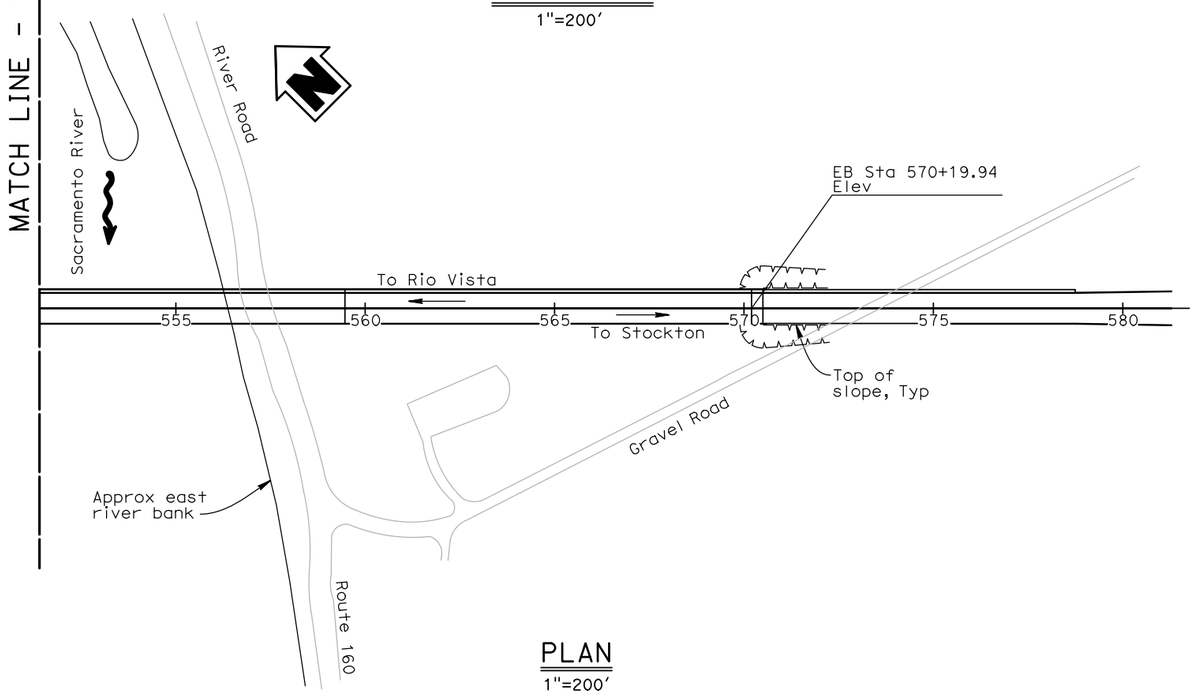


PLAN
1"=200'

## CIP SEGMENTAL CONC APPR

| | |
|---|---|
| DATE OF ESTIMATE | 1-29-2010 |
| BRIDGE REMOVAL | = 101,140 sq ft |
| STRUCTURE DEPTH | = Varies 10' to 25' |
| LENGTH | = 4535'-0" |
| WIDTH | = 92'-4½" |
| AREA | = 418,921 sq ft |
| COST/ □FT INCLUDING 10% MOBILIZATION & 25% CONTINGENCY | = $780.00 |
| SUM TOTAL COST | = $326,758,100 |
| BRIDGE REMOVAL | = $10,000,000 |
| TOTAL COST | = $336,758,100 |

## CIP P/S CONC WEST APPROACH SPANS

| | |
|---|---|
| DATE OF ESTIMATE | 1-29-2010 |
| BRIDGE REMOVAL | = 0 |
| STRUCTURE DEPTH | = 10'-0" |
| LENGTH | = 1260'-0" |
| WIDTH | = 110'-6" avg |
| AREA | = 139'229 sq ft |
| COST/ □FT INCLUDING 10% MOBILIZATION & 25% CONTINGENCY | = $225.00 |
| TOTAL COST | = $31,326,500 |

## CIP P/S CONC EAST APPROACH SPANS

| | |
|---|---|
| DATE OF ESTIMATE | 1-29-2010 |
| BRIDGE REMOVAL | = 0 |
| STRUCTURE DEPTH | = 10'-0" |
| LENGTH | = 1075'-0" |
| WIDTH | = 92'-4½" |
| AREA | = 99,303 sq ft |
| COST/ □FT INCLUDING 10% MOBILIZATION & 25% CONTINGENCY | = $225.00 |
| TOTAL COST | = $22,343,300 |

SUM TOTAL ALL SPANS= $390,427,900

**ALTERNATIVE 3 (SHEET 2 OF 3)**

**PLANNING STUDY**

SACRAMENTO RIVER BRIDGE AT RIO VISTA

| | | | |
|---|---|---|---|
| DESIGNED BY R. Price | DATE | S. Mislinski, PROJECT ENGINEER | BRIDGE NO. TBD | CU 04 |
| DRAWN BY C. Lee | DATE | | SCALE: As shown | EA 4A490K |
| CHECKED BY | DATE | | | |
| APPROVED | DATE | | | |

DESIGN OVERSIGHT X

SIGN OFF DATE

ADVANCE PLANNING STUDY SHEET (ENGLISH) (REV. 2/25/05)

FILE => U:\BRIDGE\STA0701 Rio Vista Bridge\Planning study\6-freeway bridge-ALT 3.dgn

USERNAME => PriceR1 DATE PLOTTED => 1/29/2010 TIME PLOTTED => 2:20:43 PM

PREPARED FOR THE STATE OF CALIFORNIA - DEPARTMENT OF TRANSPORTATION

| DIST. | COUNTY | ROUTE | POST MILES TOTAL PROJECT |
|---|---|---|---|
| 04 | SOL | 12 | - |

SOLANO TRANSPORTATION AUTHORITY
ONE, HARBOUR CENTER, SUITE 130,
SUISUN CITY, CALIFORNIA 94585

LIM & NASCIMENTO ENGINEERING
11344 COLOMA ROAD, SUITE 590
GOLD RIVER, CALIFORNIA 95670

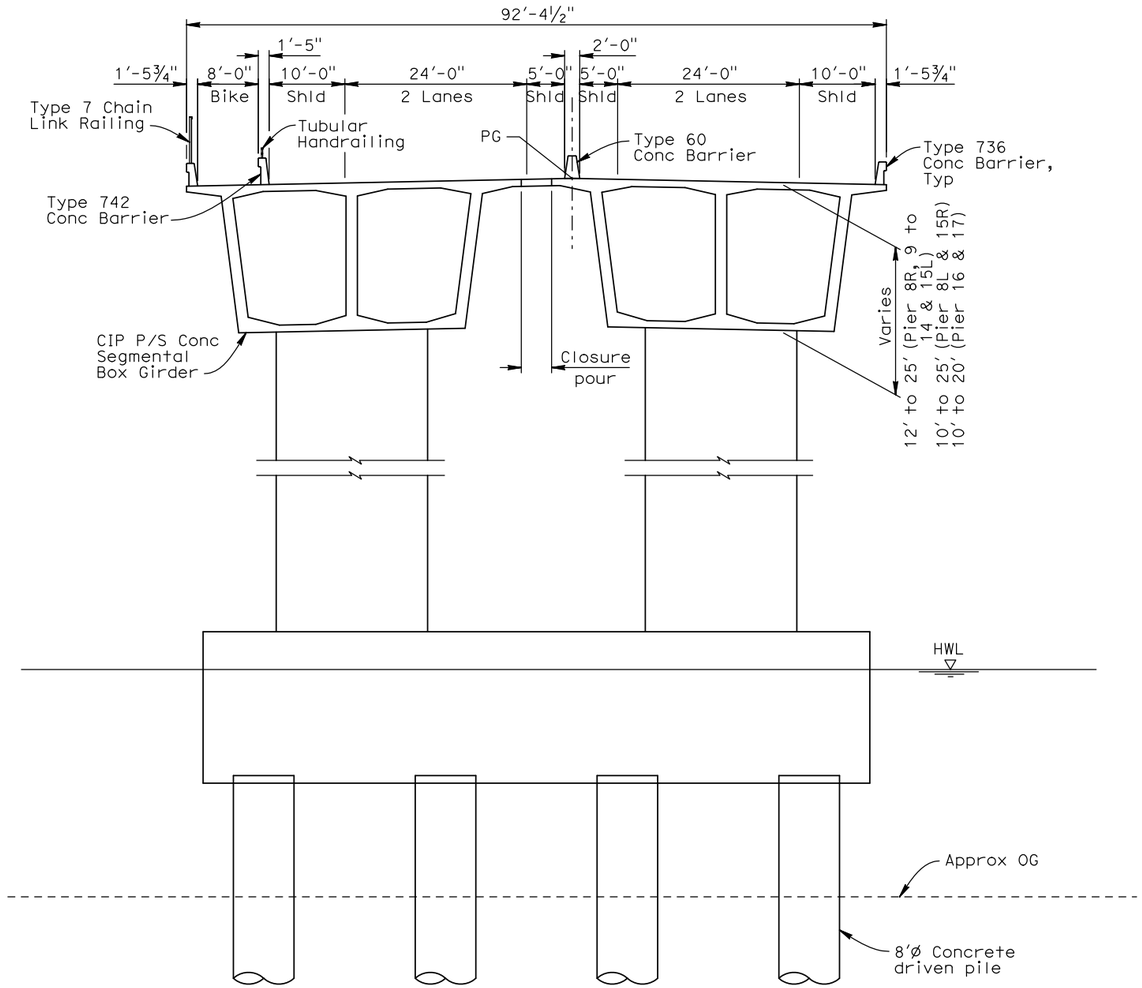


TYPICAL SECTION
1"=10'
(P/S CONCRETE SEGMENTAL SPANS)

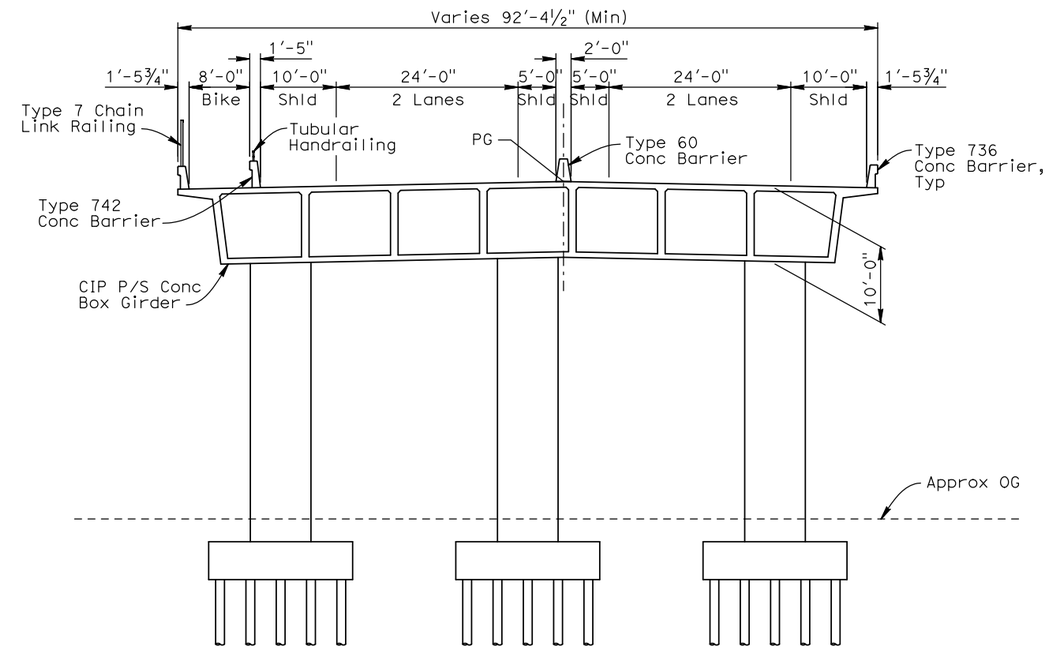


TYPICAL SECTION
1"=10'
(CIP P/S CONCRETE SPANS)

DESIGN OVERSIGHT X
SIGN OFF DATE

ADVANCE PLANNING STUDY SHEET (ENGLISH) (REV. 2/25/05)

| | | |
|---|---|---|
| DESIGNED BY R. Price | DATE | |
| DRAWN BY C. Lee | DATE | S. Mislinski PROJECT ENGINEER |
| CHECKED BY | DATE | |
| APPROVED | DATE | |

**ALTERNATIVE 3 (SHEET 3 OF 3)**

**PLANNING STUDY**

SACRAMENTO RIVER BRIDGE AT RIO VISTA

| | |
|---|---|
| BRIDGE NO. TBD | CU 04 |
| SCALE: As shown | EA 4A490K |

FILE => U:\BRIDGE\STA0701 Rio Vista Bridge\Planning study\6-freeway bridge-ALT 3.dgn

USERNAME => PriceR1 DATE PLOTTED => 1/29/2010 TIME PLOTTED => 2:21:04 PM

PREPARED FOR THE STATE OF CALIFORNIA - DEPARTMENT OF TRANSPORTATION

| DIST. | COUNTY | ROUTE | POST MILES TOTAL PROJECT |
|---|---|---|---|
| 04 | SOL | 12 | - |

SOLANO TRANSPORTATION AUTHORITY
ONE, HARBOUR CENTER, SUITE 130,
SUISUN CITY, CALIFORNIA 94585

LIM & NASCIMENTO ENGINEERING
11344 COLOMA ROAD, SUITE 590
GOLD RIVER, CALIFORNIA 95670

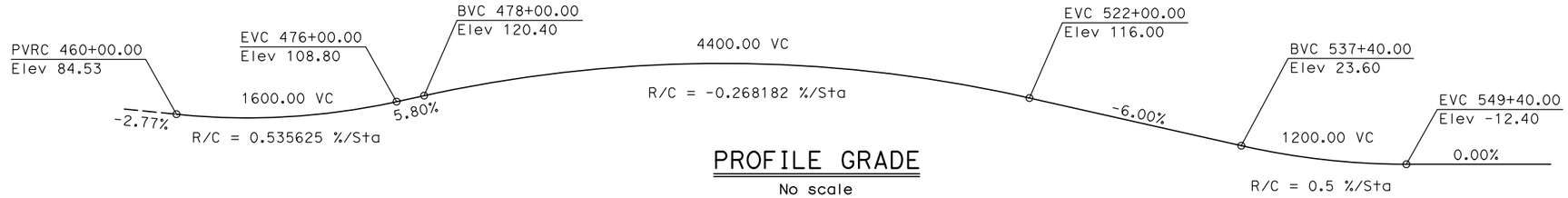


PROFILE GRADE
No scale

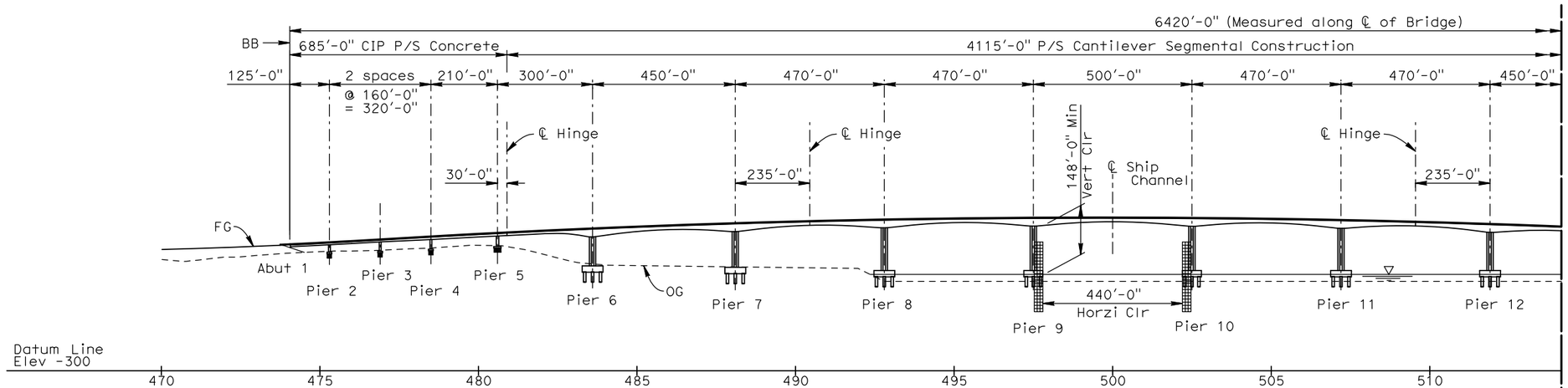


ELEVATION
1"=200'

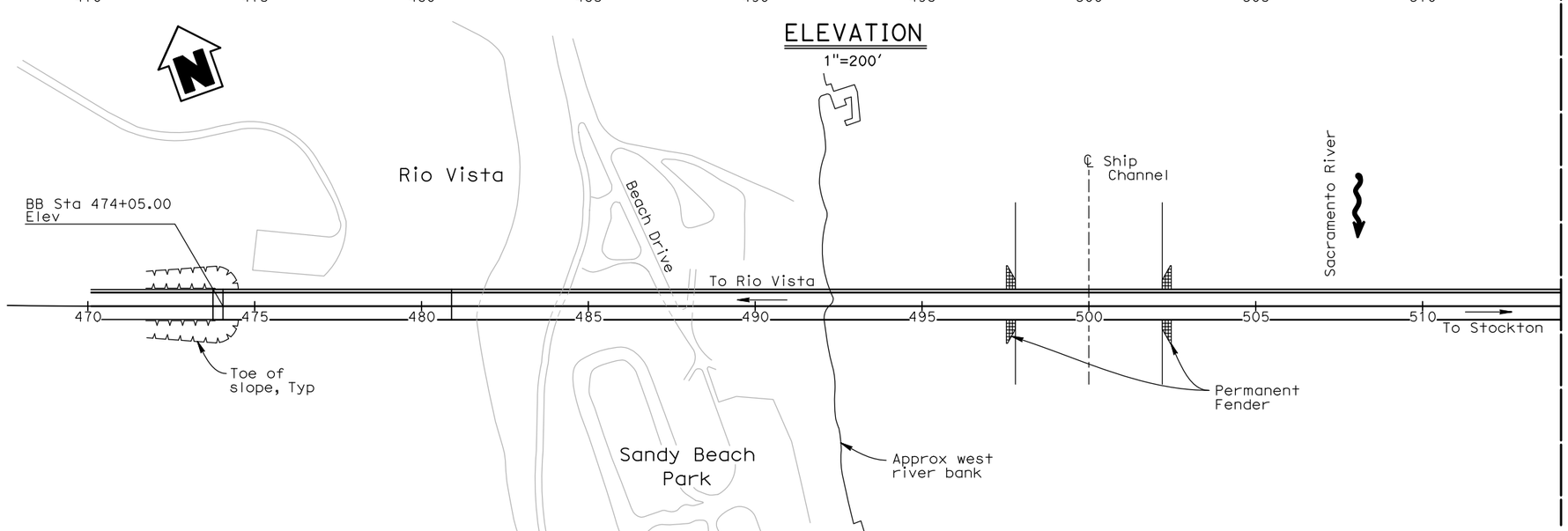


PLAN
1"=200'

MATCH LINE - SEE SHT 2

**CONCRETE SEGMENTAL OPTION**

**ALTERNATIVE 5 (SHEET 1 OF 3)**

| | | |
|---|---|---|
| DESIGNED BY R. Price | DATE | |
| DRAWN BY C. Lee | DATE | |
| CHECKED BY | DATE | |
| APPROVED | DATE | |

S. Mislinski
PROJECT ENGINEER

**PLANNING STUDY**

SACRAMENTO RIVER BRIDGE AT RIO VISTA

| | |
|---|---|
| BRIDGE NO. TBD | CU 04 |
| SCALE: As shown | EA 4A490K |

DESIGN OVERSIGHT X

SIGN OFF DATE

ADVANCE PLANNING STUDY SHEET (ENGLISH) (REV. 2/25/05)

FILE => U:\BRIDGE\STA0701 Rio Vista Bridge\Planning study\6-freeway bridge-ALT 5.dgn

USERNAME => PriceR1 DATE PLOTTED => 1/29/2010 TIME PLOTTED => 2:21:39 PM

PREPARED FOR THE STATE OF CALIFORNIA - DEPARTMENT OF TRANSPORTATION

| DIST. | COUNTY | ROUTE | POST MILES TOTAL PROJECT |
|---|---|---|---|
| 04 | SOL | 12 | - |

SOLANO TRANSPORTATION AUTHORITY
ONE, HARBOUR CENTER, SUITE 130,
SUISUN CITY, CALIFORNIA 94585

LIM & NASCIMENTO ENGINEERING
11344 COLOMA ROAD, SUITE 590
GOLD RIVER, CALIFORNIA 95670

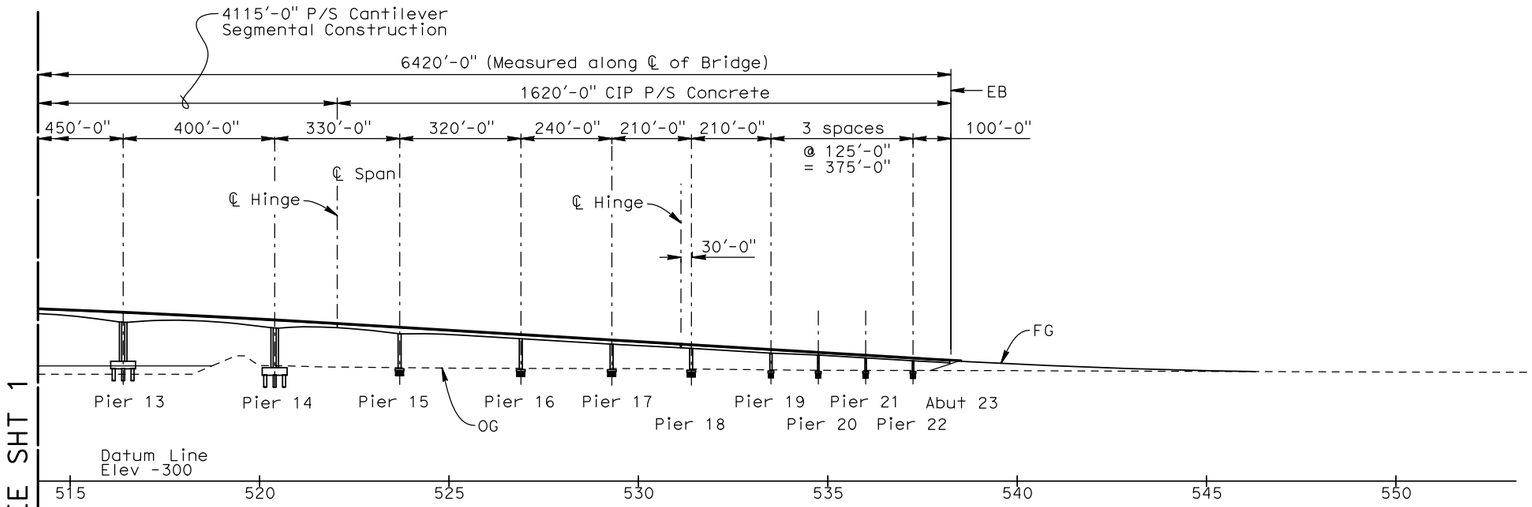


ELEVATION
1"=200'

MATCH LINE - SEE SHT 1

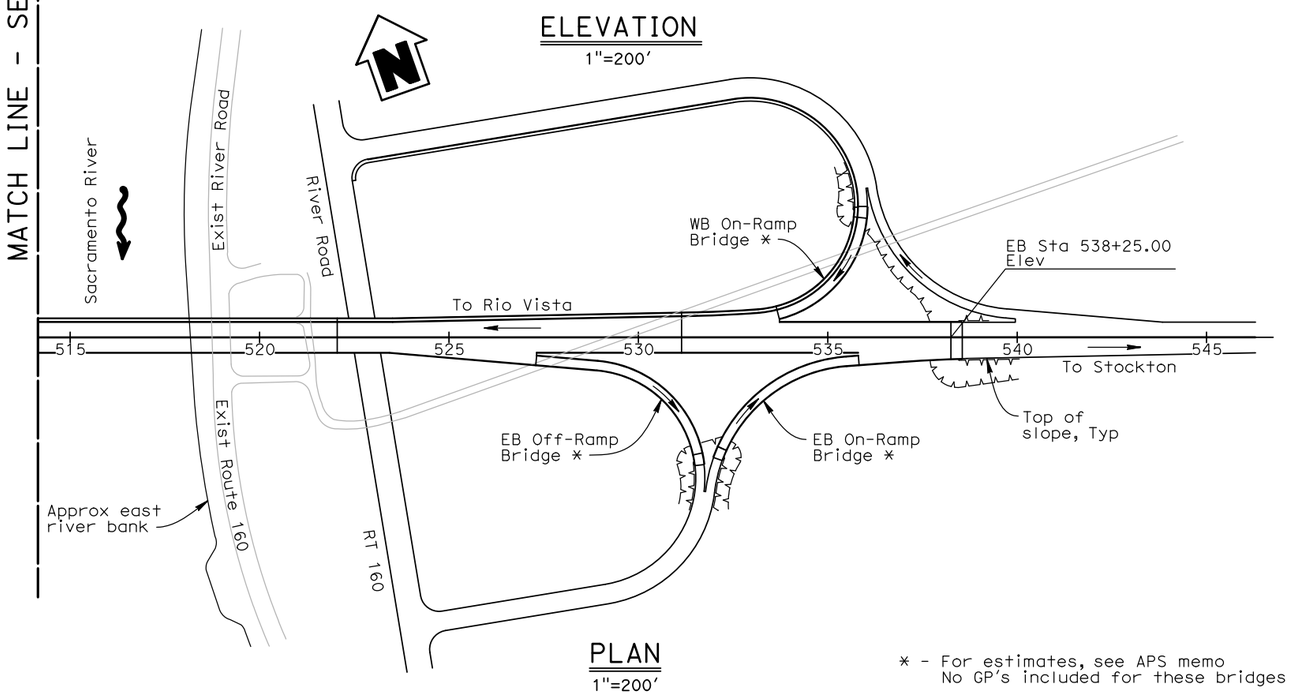


PLAN
1"=200'

* - For estimates, see APS memo
No GP's included for these bridges

## CIP SEGMENTAL MAIN BRIDGE

| | |
|---|---|
| DATE OF ESTIMATE | 1-29-2010 |
| BRIDGE REMOVAL | = 101,140 sq ft |
| STRUCTURE DEPTH | = Varies 25' to 12' or 10' |
| LENGTH | = 4115'-0" |
| WIDTH | = 92'-4½" |
| AREA | = 380,123 sq ft |
| COST/ □FT INCLUDING 10% MOBILIZATION & 25% CONTINGENCY | = $ 780.00 |
| SUB TOTAL COST | = $ 296,496,100 |
| BRIDGE REMOVAL | = $10,000,000 |
| TOTAL COST | = $306,496,100 |

## CIP P/S CONC WEST APPROACH SPANS

| | |
|---|---|
| DATE OF ESTIMATE | 1-29-2010 |
| BRIDGE REMOVAL | = 0 |
| STRUCTURE DEPTH | = Varies 16.0' to 6.5' |
| LENGTH | = 685'-0" |
| WIDTH | = 92'-4½" |
| AREA | = 63,277 sq ft |
| COST/ □FT INCLUDING 10% MOBILIZATION & 25% CONTINGENCY | = $225.00 |
| TOTAL COST | = $14,237,300 |

## CIP P/S CONC EAST APPROACH SPANS

| | |
|---|---|
| DATE OF ESTIMATE | 1-12-2010 |
| BRIDGE REMOVAL | = 0 |
| STRUCTURE DEPTH | = Varies 16.0' to 6.5' |
| LENGTH | = 1620'-0" |
| WIDTH | = 104.10' avg |
| AREA | = 168,636 sq ft |
| COST/ □FT INCLUDING 10% MOBILIZATION & 25% CONTINGENCY | = $225.00 |
| TOTAL COST | = $37,943,100 |

SUM TOTAL ALL SPANS= $358,676,500

**CONCRETE SEGMENTAL OPTION**

**ALTERNATIVE 5 (SHEET 2 OF 3)**

| | | |
|---|---|---|
| DESIGNED BY R. Price | DATE | |
| DRAWN BY C. Lee | DATE | |
| CHECKED BY | DATE | |
| APPROVED | DATE | |

S. Mislinski
PROJECT ENGINEER

**PLANNING STUDY**

SACRAMENTO RIVER BRIDGE AT RIO VISTA

| | |
|---|---|
| BRIDGE NO. TBD | CU 04 |
| SCALE: As shown | EA 4A490K |

DESIGN OVERSIGHT X

SIGN OFF DATE

ADVANCE PLANNING STUDY SHEET (ENGLISH) (REV. 2/25/05)

FILE => U:\BRIDGE\STA0701 Rio Vista Bridge\Planning study\6-freeway bridge-ALT 5.dgn

USERNAME => PriceR1 DATE PLOTTED => 1/29/2010 TIME PLOTTED => 2:21:55 PM

PREPARED FOR THE STATE OF CALIFORNIA - DEPARTMENT OF TRANSPORTATION

| DIST. | COUNTY | ROUTE | POST MILES TOTAL PROJECT |
|---|---|---|---|
| 04 | SOL | 12 | - |

SOLANO TRANSPORTATION AUTHORITY
ONE, HARBOUR CENTER, SUITE 130,
SUISUN CITY, CALIFORNIA 94585

LIM & NASCIMENTO ENGINEERING
11344 COLOMA ROAD, SUITE 590
GOLD RIVER, CALIFORNIA 95670

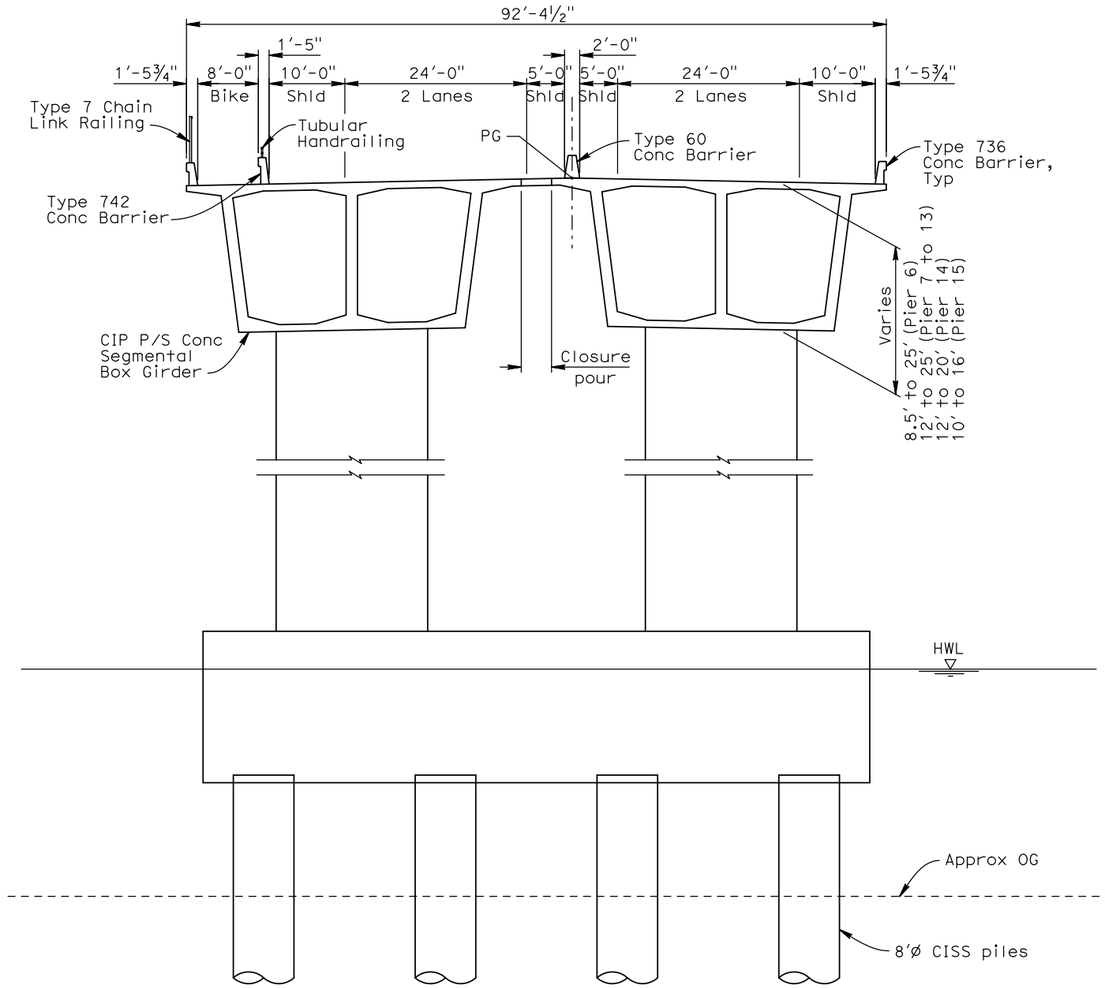


TYPICAL SECTION
1"=10'
(P/S CONCRETE SEGMENTAL MAIN SPANS)

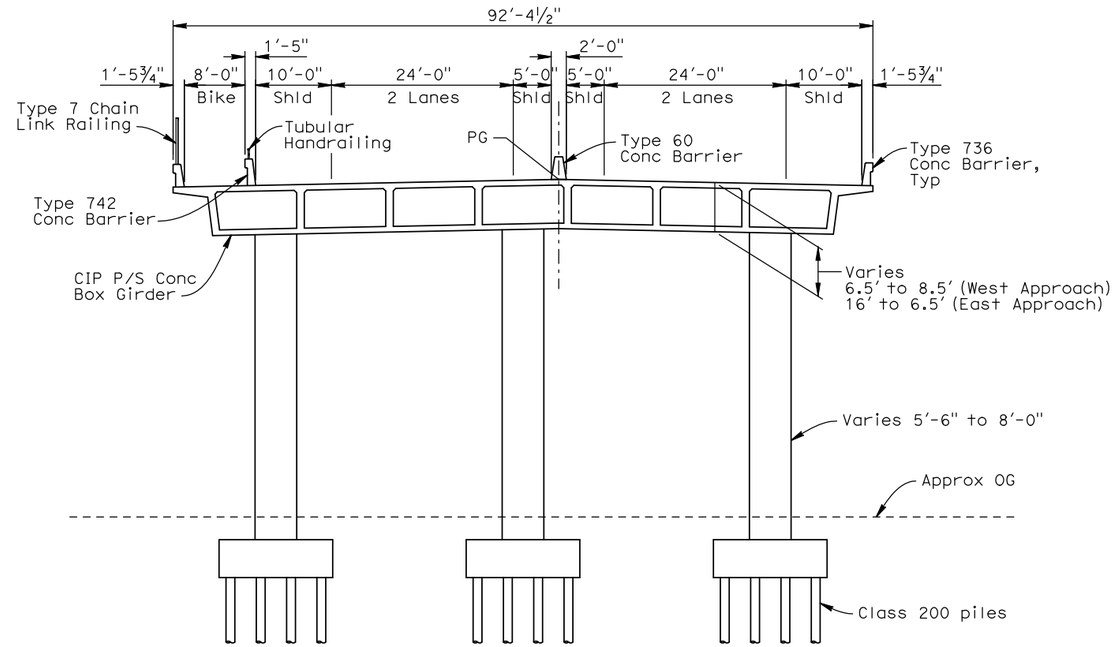


TYPICAL SECTION
1"=10'
(CIP P/S CONCRETE APPROACH SPANS)
(160' spans shown)

## CONCRETE SEGMENTAL OPTION

## ALTERNATIVE 5 (SHEET 3 OF 3)

| | | |
|---|---|---|
| DESIGNED BY R. Price | DATE | |
| DRAWN BY C. Lee | DATE | S. Mislinski, PROJECT ENGINEER |
| CHECKED BY | DATE | |
| APPROVED | DATE | |

**PLANNING STUDY**

SACRAMENTO RIVER BRIDGE AT RIO VISTA

| | |
|---|---|
| BRIDGE NO. TBD | CU 04 |
| SCALE: As shown | EA 4A490K |

DESIGN OVERSIGHT X

SIGN OFF DATE

ADVANCE PLANNING STUDY SHEET (ENGLISH) (REV. 2/25/05)

FILE => U:\BRIDGE\STA0701 Rio Vista Bridge\Planning study\6-freeway bridge-ALT 5.dgn

USERNAME => PriceR1 DATE PLOTTED => 1/29/2010 TIME PLOTTED => 2:22:16 PM

PREPARED FOR THE STATE OF CALIFORNIA - DEPARTMENT OF TRANSPORTATION

| DIST. | COUNTY | ROUTE | POST MILES TOTAL PROJECT |
|---|---|---|---|
| 04 | SOL | 12 | - |

SOLANO TRANSPORTATION AUTHORITY
ONE, HARBOUR CENTER, SUITE 130,
SUISUN CITY, CALIFORNIA 94585

INTERNATIONAL BRIDGE TECHNOLOGIES, INC.
9325 SKY PARK COURT, SUITE 320
SAN DIEGO, CA, 92123

LIM & NASCIMENTO ENGINEERING
11344 COLOMA ROAD, SUITE 590
GOLD RIVER, CALIFORNIA 95670

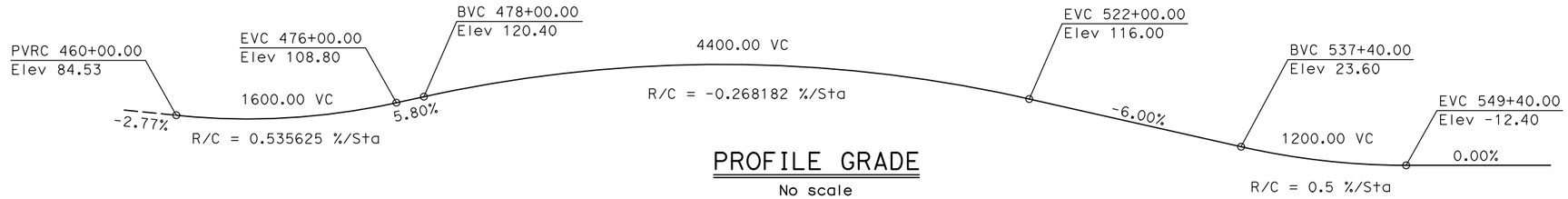


PROFILE GRADE
No scale

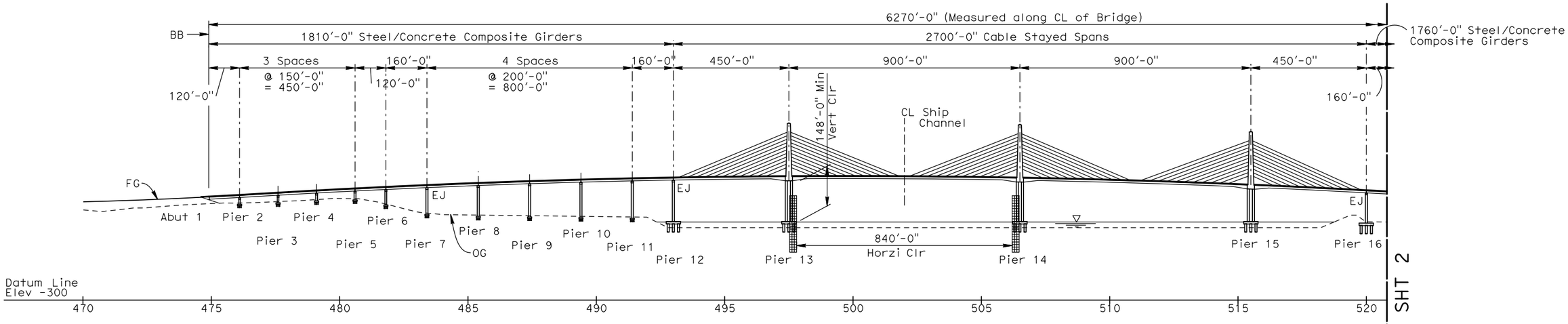


ELEVATION
1"=200'

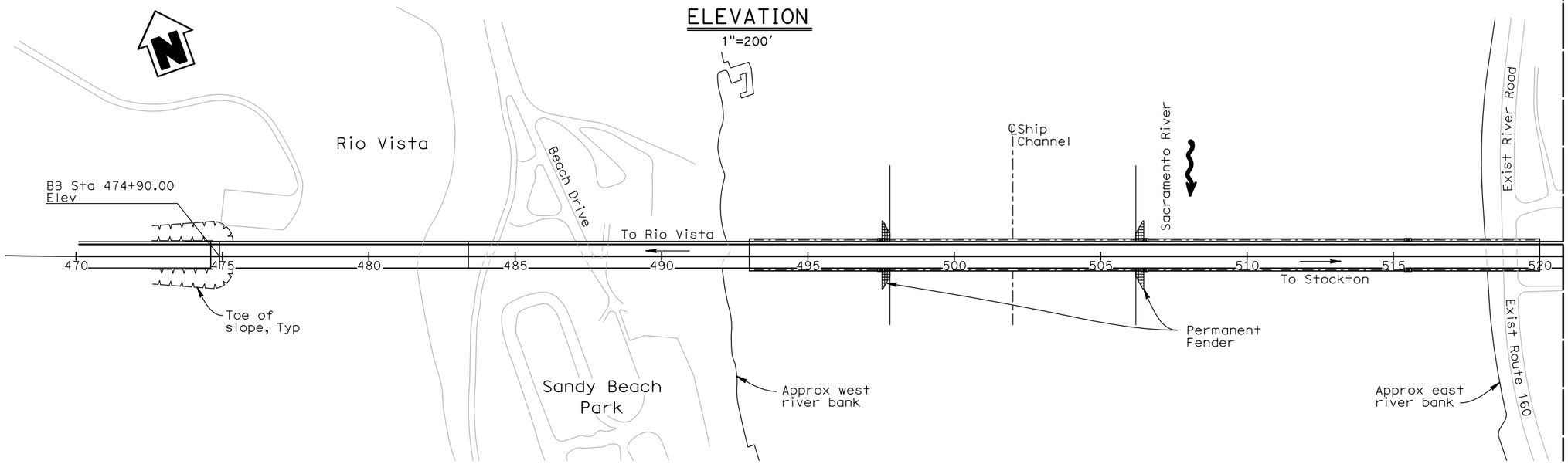


PLAN
1"=200'

MATCH LINE - SEE SHT 2

CABLE STAYED OPTION

ALTERNATIVE 5 (SHEET 1 OF 4)

| | | |
|---|---|---|
| DESIGNED BY D. Tassin | DATE | |
| DRAWN BY G. Dotti | DATE | |
| CHECKED BY | DATE | |
| APPROVED | DATE | |

S. Mislinski
PROJECT ENGINEER

PLANNING STUDY

SACRAMENTO RIVER BRIDGE AT RIO VISTA

| | |
|---|---|
| BRIDGE NO. TBD | CU 04 |
| SCALE: As shown | EA 4A490K |

DESIGN OVERSIGHT X

SIGN OFF DATE

ADVANCE PLANNING STUDY SHEET (ENGLISH) (REV. 2/25/05)

FILE => U:\BRIDGE\STA0701 Rio Vista Bridge\Planning study\6-freeway bridge-ibt_ALT_5.dgn

USERNAME => PriceR1 DATE PLOTTED => 1/29/2010 TIME PLOTTED => 2:23:49 PM

PREPARED FOR THE STATE OF CALIFORNIA - DEPARTMENT OF TRANSPORTATION

| DIST. | COUNTY | ROUTE | POST MILES TOTAL PROJECT |
|---|---|---|---|
| 04 | SOL | 12 | - |

SOLANO TRANSPORTATION AUTHORITY
ONE, HARBOUR CENTER, SUITE 130,
SUISUN CITY, CALIFORNIA 94585

INTERNATIONAL BRIDGE TECHNOLOGIES, INC.
9325 SKY PARK COURT, SUITE 320
SAN DIEGO, CA, 92123

LIM & NASCIMENTO ENGINEERING
11344 COLOMA ROAD, SUITE 590
GOLD RIVER, CALIFORNIA 95670

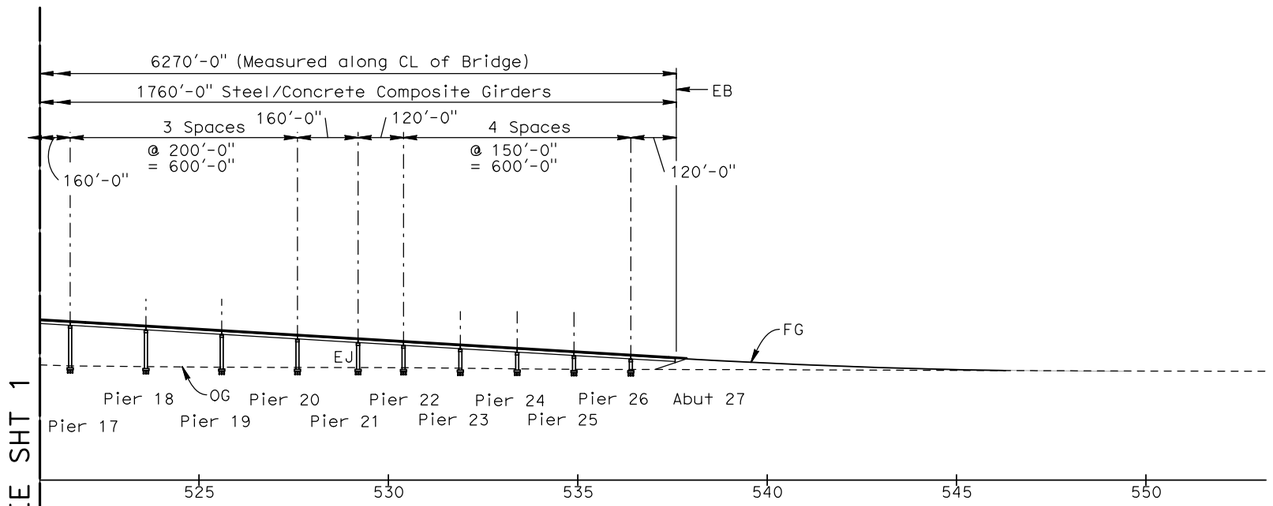


ELEVATION
1"=200'

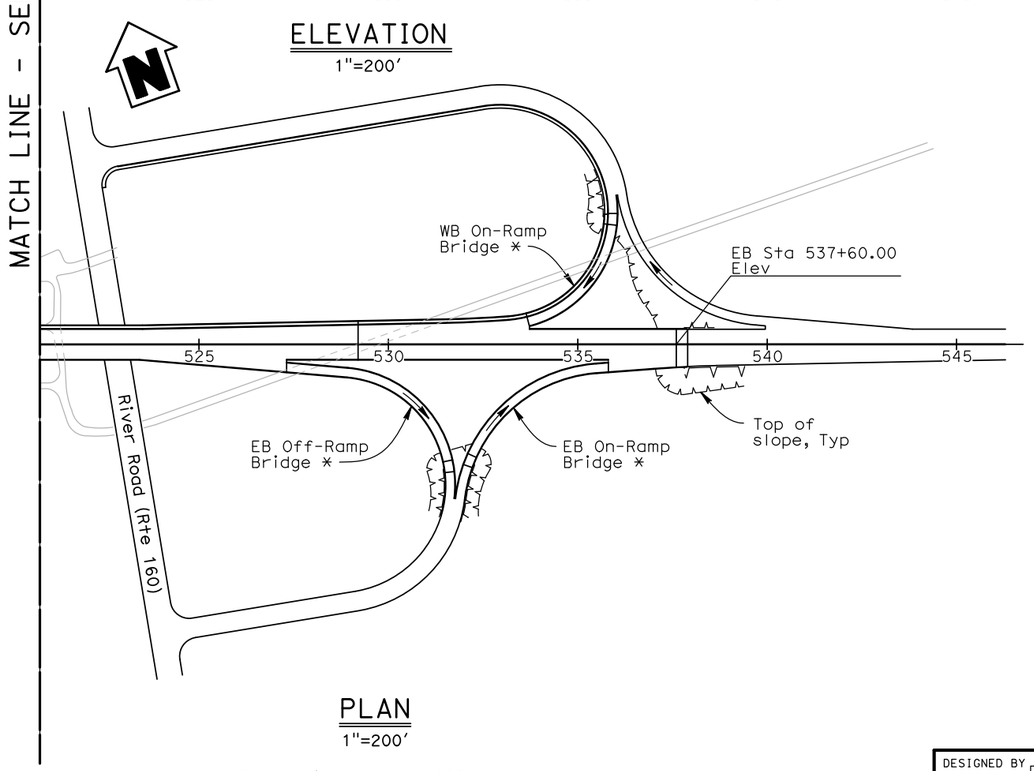


PLAN
1"=200'

* - For estimates, see APS memo
No GP's included for these bridges

## CABLE STAYED MAIN BRIDGE

| | |
|---|---|
| DATE OF ESTIMATE | 1-29-2010 |
| BRIDGE REMOVAL | = 101,140 sqft |
| STRUCTURE DEPTH | = Varies 16'-9" to 8'-9", 8'-9" typ |
| LENGTH | = 2700'-0" |
| WIDTH | = 109'-4½" |
| AREA | = 295,313 sq ft |
| COST/ □FT INCLUDING 10% MOBILIZATION & 25% CONTINGENCY | = $ 910,00 |
| SUB TOTAL COST | = $ 268,734,400 |
| BRIDGE REMOVAL | = $ 10,000,000 |
| TOTAL COST | = $ 278,734,400 |

## STEEL/CONCRETE COMPOSITE WEST APPROACH SPANS

| | |
|---|---|
| DATE OF ESTIMATE | 1-29-2010 |
| BRIDGE REMOVAL | = NA |
| STRUCTURE DEPTH | = 8'-0" |
| LENGTH | = 1810'-0" |
| WIDTH | = 92'-4½" |
| AREA | = 167,199 sq ft |
| COST/ □FT INCLUDING 10% MOBILIZATION & 25% CONTINGENCY | = $ 360.00 |
| TOTAL COST | = $ 60,191,600 |

## STEEL/CONCRETE COMPOSITE EAST APPROACH SPANS

| | |
|---|---|
| DATE OF ESTIMATE | 1-29-2010 |
| BRIDGE REMOVAL | = NA |
| STRUCTURE DEPTH | = 8''-0" |
| LENGTH | = 1760'-0" |
| WIDTH | = 103.164' avg |
| AREA | = 181,569 sq ft |
| COST/ □FT INCLUDING 10% MOBILIZATION & 25% CONTINGENCY | = $ 360,00 |
| TOTAL COST | = $ 65,364,700 |

SUM TOTAL ALL SPANS = $ 404,290,700

# CABLE STAYED OPTION

## ALTERNATIVE 5 (SHEET 2 OF 4)

| | | |
|---|---|---|
| DESIGNED BY D. Tassin | DATE | |
| DRAWN BY G. Dotti | DATE | |
| CHECKED BY | DATE | |
| APPROVED | DATE | |

S. Mislinski
PROJECT ENGINEER

## PLANNING STUDY

SACRAMENTO RIVER BRIDGE AT RIO VISTA

| | |
|---|---|
| BRIDGE NO. TBD | CU 04 |
| SCALE: As shown | EA 4A490K |

DESIGN OVERSIGHT X

SIGN OFF DATE

ADVANCE PLANNING STUDY SHEET (ENGLISH) (REV. 2/25/05)

FILE => U:\BRIDGE\STA0701 Rio Vista Bridge\Planning study\6-freeway bridge-ibt_ALT_5.dgn

USERNAME => PriceR1 DATE PLOTTED => 1/29/2010 TIME PLOTTED => 2:24:13 PM

PREPARED FOR THE STATE OF CALIFORNIA - DEPARTMENT OF TRANSPORTATION

| DIST. | COUNTY | ROUTE | POST MILES TOTAL PROJECT |
|---|---|---|---|
| 04 | SOL | 12 | - |

SOLANO TRANSPORTATION AUTHORITY
ONE, HARBOUR CENTER, SUITE 130,
SUISUN CITY, CALIFORNIA 94585

INTERNATIONAL BRIDGE TECHNOLOGIES, INC.
9325 SKY PARK COURT, SUITE 320
SAN DIEGO, CA, 92123

LIM & NASCIMENTO ENGINEERING
11344 COLOMA ROAD, SUITE 590
GOLD RIVER, CALIFORNIA 95670

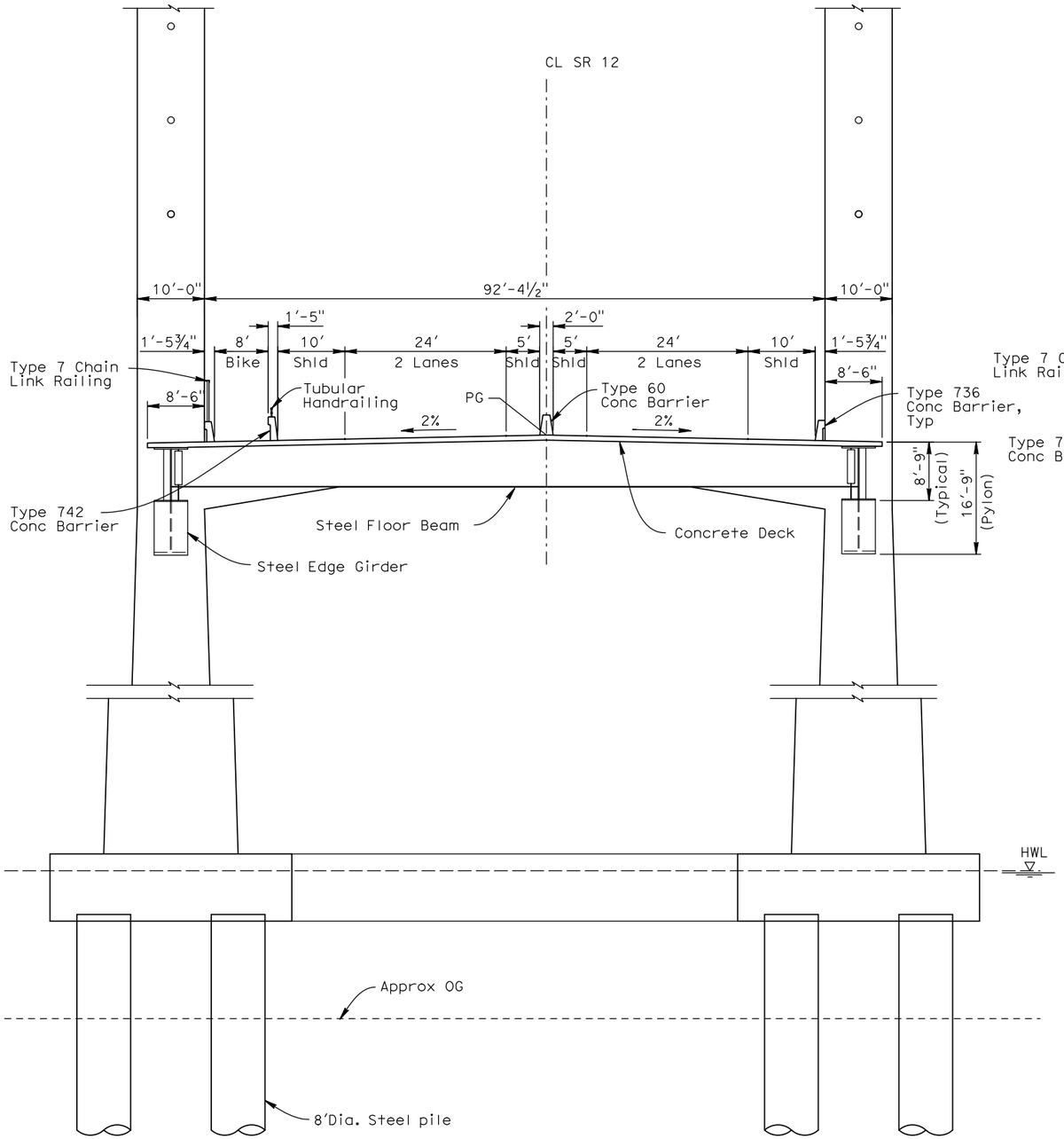


TYPICAL SECTION
1" = 20'
(CABLE STAYED MAIN SPANS)

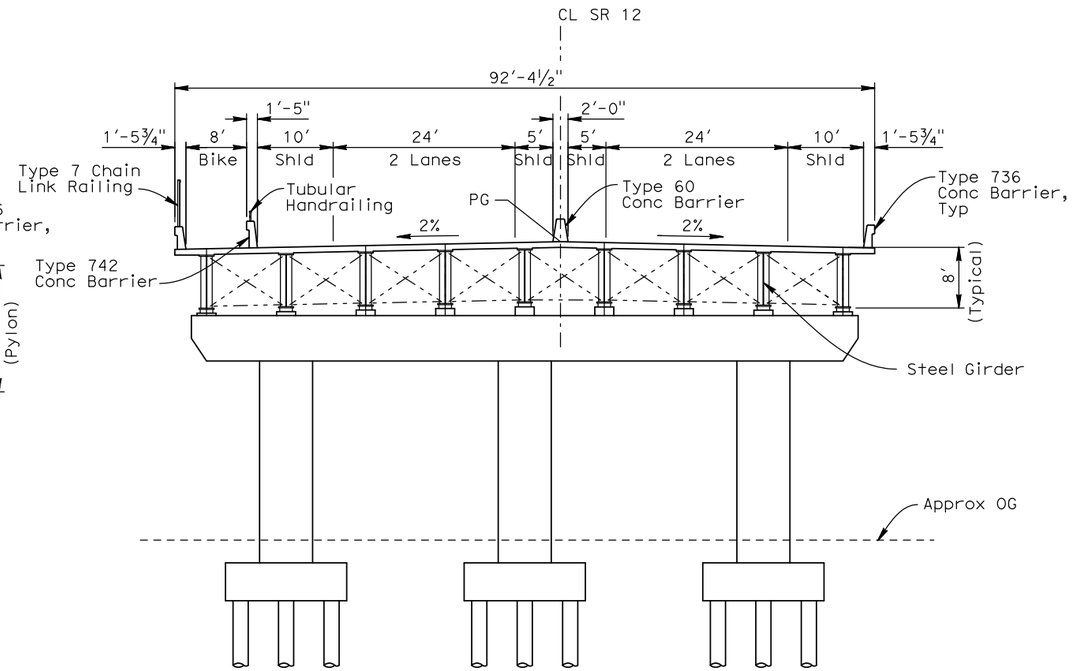


TYPICAL SECTION
1" = 20'
(STEEL/CONCRETE COMPOSITE APPROACH SPANS)

# CABLE STAYED OPTION

## ALTERNATIVE 5 (SHEET 3 OF 4)

## PLANNING STUDY

SACRAMENTO RIVER BRIDGE AT RIO VISTA

| | | |
|---|---|---|
| DESIGNED BY D. Tassin | DATE | S. Mislinski, PROJECT ENGINEER |
| DRAWN BY G. Dotti | DATE | |
| CHECKED BY | DATE | |
| APPROVED | DATE | |

BRIDGE NO. TBD — CU 04
SCALE: As shown — EA 4A490K

DESIGN OVERSIGHT X
SIGN OFF DATE

ADVANCE PLANNING STUDY SHEET (ENGLISH) (REV. 2/25/05)

FILE => U:\BRIDGE\STA0701 Rio Vista Bridge\Planning study\6-freeway bridge-ibt_ALT_5.dgn

USERNAME => PriceR1 DATE PLOTTED => 1/29/2010 TIME PLOTTED => 2:24:31 PM

PREPARED FOR THE STATE OF CALIFORNIA - DEPARTMENT OF TRANSPORTATION

| DIST. | COUNTY | ROUTE | POST MILES TOTAL PROJECT |
|---|---|---|---|
| 04 | SOL | 12 | - |

SOLANO TRANSPORTATION AUTHORITY
ONE, HARBOUR CENTER, SUITE 130,
SUISUN CITY, CALIFORNIA 94585

INTERNATIONAL BRIDGE TECHNOLOGIES, INC.
9325 SKY PARK COURT, SUITE 320
SAN DIEGO, CA, 92123

LIM & NASCIMENTO ENGINEERING
11344 COLOMA ROAD, SUITE 590
GOLD RIVER, CALIFORNIA 95670

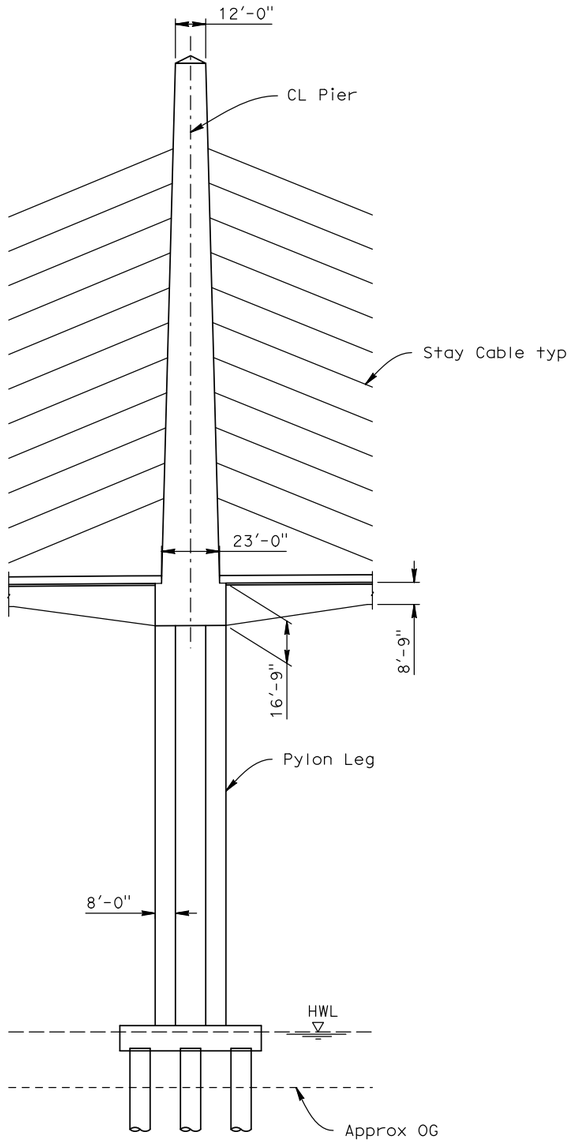


LONGITUDINAL ELEVATION
1" = 30'

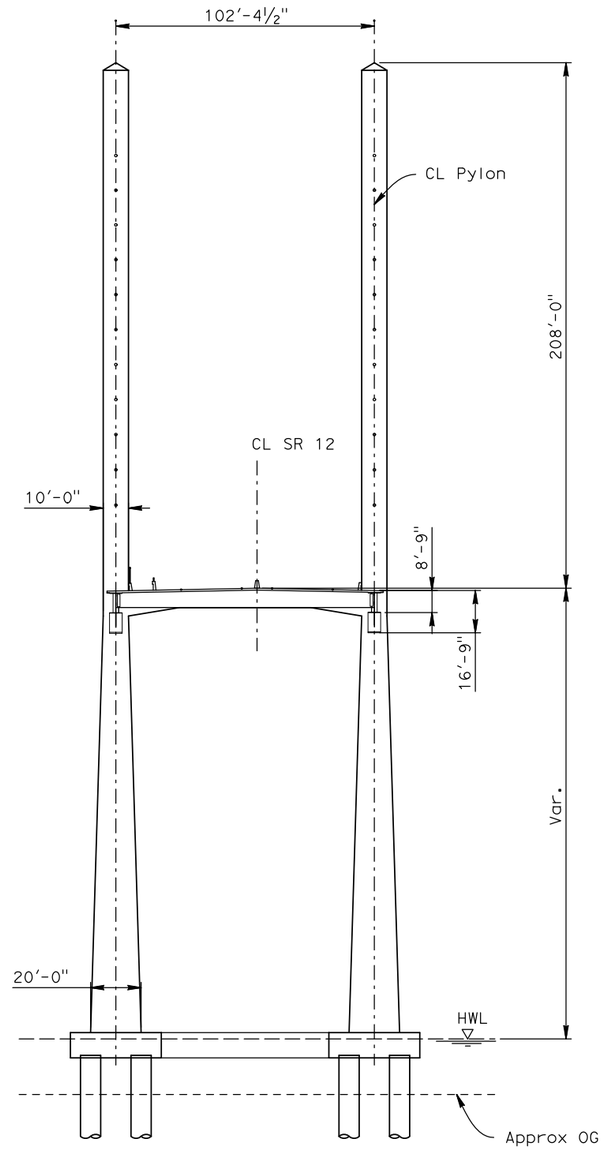


TRANSVERSE ELEVATION
1" = 30'

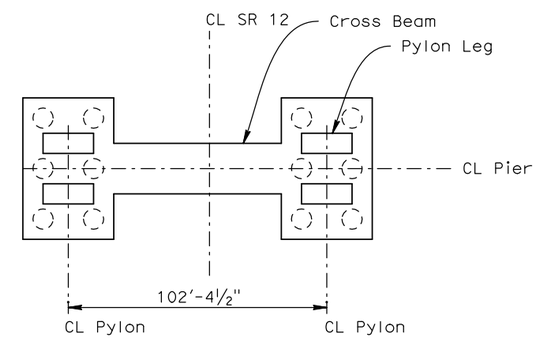


FOUNDATION - PLAN
1" = 30'

CABLE STAYED OPTION

ALTERNATIVE 5 (SHEET 4 OF 4)

PLANNING STUDY

SACRAMENTO RIVER BRIDGE AT RIO VISTA

| | | |
|---|---|---|
| DESIGNED BY D. Tassin | DATE | |
| DRAWN BY G. Dotti | DATE | |
| CHECKED BY | DATE | |
| APPROVED | DATE | |

S. Mislinski
PROJECT ENGINEER

BRIDGE NO. TBD | CU 04
SCALE: As shown | EA 4A490K

DESIGN OVERSIGHT X
SIGN OFF DATE

ADVANCE PLANNING STUDY SHEET (ENGLISH) (REV. 2/25/05)

FILE => U:\BRIDGE\STA0701 Rio Vista Bridge\Planning study\6-freeway bridge-ibt_ALT_5.dgn

USERNAME => PriceR1 DATE PLOTTED => 1/29/2010 TIME PLOTTED => 2:24:53 PM

# APPENDIX III: PRELIMINARY GEOTECHNICAL MEMORANDUM

# PRELIMINARY GEOTECHNICAL MEMORANDUM

## SR-12 REALIGNMENT / RIO VISTA BRIDGE PRELIMINARY STUDY

04-Sol-12-PM 19.17 to 03-Sac-12-PM 5.8

EA 04-4A490K

**Submitted to:**


**California Department of Transportation**
**Division of Program / Project Management North Mail Station: 7G**
111 Grand Avenue
Oakland, CA 94612
**Contact: Jason Mac, PE**
***Tel: (510) 622-8891***


**Submitted by:**


Solano Transportation Authority
One Harbor Center, Suite 130
Suisun City, CA 94585
**Contact: Janet Adams, PE**
***Tel: (707) 424-6010*** Fax: (707) 424-6074


**Prepared for:**


**LIM & NASCIMENTO ENGINEERING CORP.**
11344 Coloma Road, Suite 590
Gold River, CA 95670
**Contact: Steve Mislinski, PE**
***Tel: (916) 635-5233*** Fax: (916) 635-5243


**Prepared By:**


**Taber Consultants**
3911 West Capitol Avenue
West Sacramento, CA 95691
**Contact: Martin W. McIlroy, CEG**
***Tel: (916) 371-1690*** Fax: (916) 371-7265


***May 2008***

Taber
Since 1954

3911 West Capitol Avenue
West Sacramento, CA 95691-2116
(916) 371-1690
(707) 575-1568
Fax (916) 371-7265
www.taberconsultants.com

May 29, 2008

Mr. Steve Mislinski
Lim & Nascimento Engineering
11344 Coloma Road, Suite 590
Gold River, California 95670

Subject: **Preliminary Geotechnical Report**
SR 12 Realignment/Rio Vista Bridge
Solano County, California

1P2/306/86
38121-B6:120N:160W

Dear Mr. Mislinski:

## Introduction

In accordance with our agreement with Lim & Nascimento Engineering we have completed a preliminary geotechnical report for the above site. The purpose of study is to develop limited available soils and geologic data into criteria for use in preparation of preliminary planning/evaluation of proposed alignments and bridge replacement alternates. The data and conclusions contained in this report should not be construed as criteria for use in developing project design past the general planning stage.

The primary element of study for this project consists of obtaining and reviewing/evaluating available data. It is understood that no new geotechnical data has been developed since our "Preliminary Geotechnical Engineering Review" dated August 5, 1993. This report is based on data acquired for our original report.

The available data appears to provide a reasonable picture of the range of earth materials and conditions likely to be encountered during design/construction of the proposed project. Along with a selected project alternate and defined structure type, support locations, etc., the data developed can provide a basis for generating the scope of an appropriate design geotechnical engineering study.

## Site and Project Description

Original site topography is shown on the USGS "Rio Vista, California" 7½ quadrangle (1953; photo-revised 1968). In general, the existing/proposed SR-12 alignment(s) crosses gentle/moderate terrain with numerous swales/drainages in the Montezuma Hills area west of Rio Vista from the intersection of SR-113 (west project boundary) at/near elev. 150 to the Sacramento River crossing at/near elev. 10. From

the Sacramento River crossing eastward, topography is generally flat-lying and depressed between elev.-10 and elev.-15 to the Mokelumne River (east project boundary). On Brannon Island, existing SR-12 crosses Tomato Slough and Jackson Slough about one mile and three miles, respectively, east of the Sacramento River crossing.

Proposed crossing locations for SR-12 are shown on the attached "SR-12 Alignment Alternatives" Exhibit 1 (undated).

## Geologic Setting

The project site is located within the southwestern Sacramento County and southeastern Solano County portions of the Great Interior Valley of California. The Great Valley is a gently-sloping to flat-lying area between the Coast Ranges on the west and the Sierra-Nevada on the east. The valley surface is underlain by a sequence of sediments up to several thousand feet thick. Depth to bedrock within the proposed project limits is on order of 1800-ft (USGS-OFR 72-737). The lateral distribution of surface geologic units is shown on attached Figure-1.

The dominant geologic unit west of the Sacramento River is composed of deposits associated with the Montezuma Formation (map unit Qmz, see Figure-1). This formation generally consists of alluvial deposits of poorly stratified, poorly consolidated gravels, sands and clays. Older alluvium (Qom) of the Montezuma Hills and vicinity forms slightly to moderately dissected fans on the northeast flank of the Montezuma Hills. Minor amounts of younger alluvium (Qym) of the Montezuma Hills are present but are very limited in extent and lie in and adjacent to presently active streams.

Natural deposits along the banks of the Sacramento River and eastward are associated with more recent near surface deposits of tidal wetlands and waterways (Qpm) and natural levees (Q1). These deposits are characterized by river flood plains and channels/sloughs which lie along the Sacramento and San Joaquin Rivers. Materials may vary considerably in grain size from coarse sands along former stream channels to fine-grained silts and clay along the outer edges of flood plains. Interlayered to concentrated deposits of peat are typical of more recent materials in low-lying areas of the Delta and commonly are the material which has naturally backfilled old low-velocity stream channels. Normally consolidated fine-grained materials associated with delta deposits generally have limited capability in direct bearing and are significantly compressible under more than light incremental loading. Peat, where present, is generally very weak and very compressible under incremental loading.

Taber
Since 1954

1P2/306/86

In the early 1900's hydraulic dredge soils (Qds) were deposited in an attempt to widen, straighten, and/or deepen the Sacramento and San Joaquin Rivers. Man-made hydraulic dredge soils consist of sand and subordinate silt, clay and peat. Within the project boundaries/alignments, these materials are shown to be banked against the base of the Montezuma Hills along the river southwest of Rio Vista and also extend to the north of Rio Vista as far as the new airport (approximately 2 miles). Man-made hydraulic dredge soils are generally considered unreliable for direct structure support, but may be capable of providing support for light superposed loads.

Older alluvial deposits underlying recent Sacramento River deposits and tidal wetlands (Q1 and Qpm) within the limits of the proposed project are associated with Great Valley and/or Montezuma Hills sediments and typically consist of flat lying interlayered gravels, sands, silts and clays. Materials within such deposits are typically normally to over-consolidated and are generally stronger (more competent) and significantly less compressible than overlying Delta deposits.

The nearest major, capable/active faults (per CDMG OFR 92-01 and 92-03) are indicated to be the Antioch fault located 12±miles southwesterly and the coast Range-Sierra Nevada Block Boundary seismic source zone located about 8-miles southwesterly. The Midland fault is also shown on published mapping (USGS OFR 82-737) to cross beneath SR-12 1.6±miles east of the Sacramento River crossing. The Midland fault is a suspected potentially active fault.

While the project area is considered susceptible to significant ground shaking from events on nearby faults, it is not in an Alquist-Priolo Special Study Zone and the potential for fault-rupture is considered remote. Secondary seismic effects typically associated with loose/weak sands/fills are liquefaction, rapid densification, lateral spreading and ground lurching.

There are no historical records of damage resulting from earthquakes in Rio Vista. However, historic ground failure associated with the 1906 San Francisco Earthquake has been recorded to have occurred at locations west and southeast of the current location of the Rio Vista river crossings. Approximately 19 miles west of the existing river crossing, ground settlement of up to 11±ft was recorded/observed along the Southern Pacific Rail Road tracks. Ground settlement and lateral spreading of up to 3±ft was experienced 20± miles southeast at the Santa Fe Rail Road Bridge across the Middle River between Point Richmond and Stockton.

## Soils Profiles

Soils boring data sources include Caltrans studies for the existing bridge, SR 12 and SR 160 roadway projects and several studies for other facilities scattered irregularly over the project vicinity. Non-boring sources consist of geologic mapping of the project area.

Based on review of the geologic and soils data, "characteristic" soils profiles have been developed for various project elements/areas. These soil profiles are believed to present a reasonable picture of controlling soil conditions. However, the categories are very broad and details emerging from design studies will vary significantly from place to place. These profiles will be updated and refined as additional geotechnical study is performed for this project.

West of the river, free groundwater is expected to be present along swales at least seasonally. Other more erratic occurrences cannot be precluded but are not expected to have significant impact on project design or construction. East of the river and probably west of the river north of Rio Vista free groundwater is expected at shallow depth and will be a significant factor in any earthwork or excavations made below existing ground surface.

West of Sacramento River and South and West of Rio Vista

For project elements located west of the Sacramento River and west of downtown Rio Vista, soils may be generally characterized as compact-very stiff gavel, sand, silt and clay. Locally along channels and flat areas, some soft-stiff clay and/or loose sand/gravel may be present to shallow depth. In general, soils in this area are expected to be capable of supporting moderate to heavy foundation and fill loads.

At/near the west approach to the existing bridge in Rio Vista, there is as much as 30-40±ft of peaty soils overlying more competent "mineral" soils (sand/silt/clay). The thickness of the peat soils is expected to thin to the west and south with increasing distance from the axis of a buried tributary channel. Underlying mineral soils are expected to be capable of generating support for heavy, concentrated foundation loads. Peat soils are weak and highly compressible even under very limited incremental loading.

West of Sacramento River and North of Rio Vista

For project elements located west of the Sacramento River and north of downtown Rio Vista, soils are variable, with proposed alignments crossing soils mapped as hydraulic-dredge soils and peat and mud of tidal wetlands and waterways, bordered

(and possibly underlain) by Pleistocene-aged alluvium of Montezuma Hills and vicinity. The older alluvial soils are anticipated to be capable of generating support for heavy, concentrated foundation loads. Hydraulically placed and peat soils are generally considered weak and highly compressible even under very limited incremental loading. Depths of these weaker soils are unknown, but anticipated to be on the order of 5-ft or more for hydraulic dredge soils.

Sacramento River at Existing Bridge Location

In the river, a characteristic profile (based on exploration by Caltrans for the existing bridge) consists of mud and loose sand to elev.-55±ft (30±ft below low channel grade) underlain by compact-very stiff sand and clay to elev.-90±, in turn underlain by very dense sand and very hard clay (to maximum depth of Caltrans exploration = elev.-110±). The underlying soils are expected to be capable of generating support for heavy concentrated foundation loads with a significant contribution by all soils below elev.-55±. Mud and loose sand above elev.-55 are interpreted as very recent alluvium/bedload; they are potentially subject to scour and are not considered suitable or reliable for supporting any structure foundation loads. We are not aware of any scour study performed for this project.

East of Sacramento River (Brannan Island)

East of the Sacramento River, a typical soils profile is expected to consist of 15-25±ft of weak, compressible peaty soils overlying another 5-10±ft of soft clay grading downward to compact-dense sand and/or very stiff-hard clay. Peat soils are very weak and highly compressible, although a shallow "crust" (say, 2-3±ft thick) is common at the surface owing to oxidation and desiccation of the organic soil. Soft clay immediately below the peat is expected to be at least moderately compressible and to have limited shear strength. Peaty soils and soft clays have been noted to extend as far as 35-40± below existing grade at the time of investigation; some areas may have deeper compressible soil profiles. Soils at greater depth are expected to be capable of supporting moderate to heavy directly applied and/or superposed fill/foundation loads without distress.

## Corrosivity

We are not aware of any recent corrosivity testing performed at or near the project site. Reports for SR 12 earthwork (in 1954) east of the river indicate that native soils are highly corrosive. Accurately determining corrosivity characteristics of the subsurface soils would require soil sampling and corrosivity testing to be performed during the PS&E phase of the project.

## Site Seismic Conditions

The existing bridge site is located approximately 7.6±miles (12.2±km) west of the Coast Ranges-Sierran Block Boundary Zone (CSB) fault; the style of this fault is listed as reverse including thrust (per Caltrans "California Seismic Hazard Map 1996" and accompanying technical report). A "peak bedrock acceleration" of 0.33 g can be assigned to this site, associated with a controlling event of 7.0 magnitude on this fault. Based on available boring data, the future bridge sites can likely be assigned a Soils Profile Type E or F, depending on future bridge location (per Table B.1, Caltrans "Seismic Design Criteria" (SDC) version 1.4).

Caltrans structure design practice requires certain increases in SDC response curves due to fault type and fault proximity. The near-field condition applies to this project and the 20% increase required for reverse including thrust fault style.

Based on the above information, structure design is recommended to be based on the following SDC parameters:

- Soil Type E or F
- Magnitude 7.0±0.25
- peak bedrock acceleration of 0.4 g
- ARS curve from SDC Figure B.11 (for Soil Type E, Soil Type F requires site-specific analysis)

The recommended ARS curve for Soil Type E is attached as Figure-2 (from digitized curves available from Caltrans).

Other than the distortion and local instability of embankment/levee fills/slopes and potential for liquefaction in loose sands, the risk of secondary seismic effects appears low.

Further study would be required to more closely define the above values or other site-seismicity characteristics.

## Discussion

In general, materials anticipated to be encountered along proposed individual alignments and different alternates vary significantly and are expected to affect the alternates/alignments differently. Typical surficial materials are not considered suitable for direct support of bridge foundations but may be appropriate for support of limited

embankment or roadway fill loading. Consideration is expected to be required for surficial soils compressibility/settlement under any significantly increased fill/embankment loading; use of lightweight fill or preconsolidation should be considered at embankment locations susceptible to settlement.

This study is very broad and preliminary and suitable only for use in preliminary planning of alignments/general schemes. Subsurface investigation directly linked to structure requirements will be required for use in setting design and construction criteria for foundations; we anticipate this further geotechnical study to be performed in the PS&E phase of the project. The following discussion is keyed to "typical" soils profiles indicated above.

## Bridge Foundations

Older deposits/materials at depth are expected to be capable of supporting heavy concentrated foundation loads without distress. It is anticipated that structure support may be achieved in such materials by means of driven piling achieving bearing through side friction and end bearing.

Soil conditions are consistent with the use of driven pile foundation penetrating through weak compressible surficial soils and/or channel bedload into relatively competent underlying soils. On land, the depth of very weak peaty soils varies from 30-40±ft in the vicinity of the west approach to the existing bridge and to 15-25±ft east of the Sacramento River; soft soils are likely absent at the west end of Alt. 5 and 6 bridge locations. Depth of soft/peaty soils is unknown west of the river north of Rio Vista. Geologic mapping in this area indicates surficial soils consisting of peat and mud, hydraulic dredge soils, and Pleistocene-aged alluvium materials. Borings made for the existing bridge indicate the base of muck and loose sand in the channel at elev.-55±. Substantial and significant variations in soil profiles are likely to be encountered in design studies.

Anticipated pile loadings/diameters for bridge foundations are unknown, however driven piling of various diameters and capacities are available (say, 100 to 500 ton capacities). Piling of 100 ton capacity would probably consist of 14-inch square pre-cast concrete or 16-inch diameter steel pipe piling; CIDH/CISS piling may be suitable at the west abutment for bridge locations south of Rio Vista. Larger diameter piles of higher capacities are expected to be steel or pre-stressed concrete tubes driven open-ended. Pile footings in the channel will tentatively be constructed at water level with piles acting as columns. Pile footings on land are expected to be embedded in the ground.

Based on available soils data, it appears that desired pile types can be driven to bearing, but jetting or drilling through cylindrical piles to aid in achieving required penetration may be necessary. Based on assumed "typical" soil profiles, estimated pile tips for larger capacity piles is on the order of elev.-100 or possibly deeper. About 40-ft of original ground penetration is expected to be required for 16-inch CIDH 100 ton piling west of the river and south of Rio Vista. With the exception of lateral loading, such piles are expected to be suitable for typical (Caltrans) service load combinations.

Settlement from embankment loading may be substantial and may apply significant incremental loading to foundation piling at abutments through "negative skin friction". Pre-drilling for pile foundations, driving piles to more than nominal bearing capacity to allow for negative skin friction and the use of approach slabs are methods which may also be used to accommodate settlement and associated loading conditions. Use of lightweight fill in embankments should also be considered.

Piles with ground penetrations per above are expected to be "fully embedded" with respect to lateral loading. The effective column height of piling for piers in the channel will be on the order of 55-70±ft. Soft peaty soils are not expected to provide more than very limited lateral restraint and effective column heights for pier footings east of the river and west of the river may be as much as 40±ft. Piles at abutments (in embankment fills) are expected to have typical "firm" soil response to lateral loading, although the seismic response and stability of abutment fills founded on peat may not be acceptable.

Allowable loading and specified tip elevations of non-standard and/or large diameter piling will likely be controlled by settlement. Allowance should be made in schedule and budget for static load testing of selected initial piles.

Soil conditions in the channel are also likely to be suitable for construction similar to existing bridge – i.e. piling driven with followers within sheet-pile cofferdam, tremie seal and de-watering, etc. However, future channel dredging may render this approach much more difficult owing to greater pier footing depth required. Soil support is also likely available for other approaches to foundation design/construction (e.g. "floating" caissons, caissons bearing as "footing"); additional comment can be provided on such approaches, but owing to their relative sensitivity to local soil conditions and to the uniformity of soil conditions across the pier areas, the present limitations in available soils data may be critical.

## Tunnel

It is our understanding that the possibility of a "bored" tunnel near the existing bridge alignment may be considered. At this time we are not aware of depth of dredging activities in the channel; we understand a cut-and-cover or excavated tunnel would not be considered due to constructability and environmental concerns. Depth of existing soil borings in the channel (from 1955) does not extend below elev.-110±; soils between elevations -55 and -110 consist of compact to very dense sandy soils with some discontinuous layers of gravel and stiff to very hard silt.

Preliminary tunnel alignment and elevations are not available at this time. Excavations for the proposed tunnel option will likely encounter loose alluvial materials and varying thicknesses of peat above elevation -55. Type of support at the base of tunnel will depend on the tunnel base elevation and vertical and horizontal distribution of earth materials below the tunnel base. Competent materials may or may not be found within the channel at elevations appropriate for tunnel support. Where the depth of the tunnel is above more competent materials (i.e., tunnel base in peat or recent alluvium) pile support or ground improvement activities may be necessary. Depending on tunnel location, groundwater levels will likely influence excavations and tunnel construction. Tunnel entrances are assumed not to encroach into existing levee embankments; if levees are to be disturbed or encroached upon it will be a critical concern and design consideration for the project.

## Embankment Fills at Structure Approaches

Embankment approaches east of the river and north of Rio Vista and also west of the river may/will be constructed in areas with significant depths of very soft, weak, compressible peaty soils. It is not expected that any new embankment or foundations will be constructed on or adjacent to existing river levees; such construction would be a critical consideration. Previous construction for improvements to SR 160 and the SR 160/SR 12 intersection have incorporated provisions for wick drains, controlled loading rate (1±ft fill/week) and light-weight (wood-chip) embankment fill material.

Assuming no modification of fill foundation in areas of peaty soils, estimated settlement for various fill heights ranges 1±ft for 5-ft fill to 6±ft (or more) for 50-ft high fill. With the use of wick drains (and possibly surcharging), the time required for settlement can likely be kept to less than 180-days. Stability of embankment foundations is also a concern and slopes flatter than 2:1 may be required.

At approach embankment locations east of the river and north of Rio Vista, there can be sufficient horizontal clearance available to allow partial/full excavation of peat and/or soft compressible soils and replacement with engineered fill. Such a procedure would substantially reduce concerns regarding residual settlement/negative skin friction on piling, embankment stability and an extended construction/waiting period (although would not expect to entirely eliminate required waiting period). Full depth excavation of peat and replacement is recommended (for planning) within 150±ft of bridge abutments. Similar effects <u>might</u> be achieved with other ground improvements strategies, (e.g. stone columns), but their effectiveness is difficult to assess within the scope of this study.

It is expected that, away from abutments, embankment construction to, say, 25±ft high, will be generally feasible without special fill foundation preparation; the use of wick drains and sand blanket to accelerate settlement, light-weight fills, fill reinforcement, flatter side slopes and/or controlled construction/loading rate may be necessary to maintain reasonable construction stability. The risk of local embankment foundation failures would be an element of such work and significant post-construction settlement and residual differential settlement can be anticipated – particularly across buried peat channels.

Some proposed west abutment/embankment locations are in town, where settlement could have highly detrimental effects on underground utilities or buildings in the immediate vicinity. A specific approach to constructing embankment in this environment will depend on local soil conditions, clearances to structures/utilities, etc. For planning purposes, it may be reasonable to assume relocation of all buried utilities outside of embankment areas and careful monitoring of nearby structures as minimum construction requirements. The use of pile supported retaining walls, light-weight fills, mechanically stabilized embankments, ground improvement techniques (e.g. stone columns) could also be considered.

For tunnel approaches, consideration should be given to settlement/consolidation of compressible soil/peat layers with regard to retaining walls and other appurtenant structures associated with tunnel entrances. Foundations for appurtenant structures will need to consider superposed fill loads and associated settlement in areas of softer soils and will likely require pile support. Excavation and replacement of soil at the tunnel approaches may also require settlement periods, wick drains, surcharging, etc.

* * * * * * * * * * * * *

Taber
Since 1954

1P2/306/86

Please call this office if you have any questions and/or comments regarding the information contained in this letter. Thank you for the opportunity to be of service.

Very truly yours,
TABER CONSULTANTS

Ronald E. Loutzenhiser
R.C.E. 64089

Reviewed By: Martin W. McIlroy
C.E.G. 2322

Attachments:

"SR-12 Alignment Alternatives" Exhibit 1
Figure-1 "Geologic Units"
Figure-2 "Caltrans SDC ARS Curve"

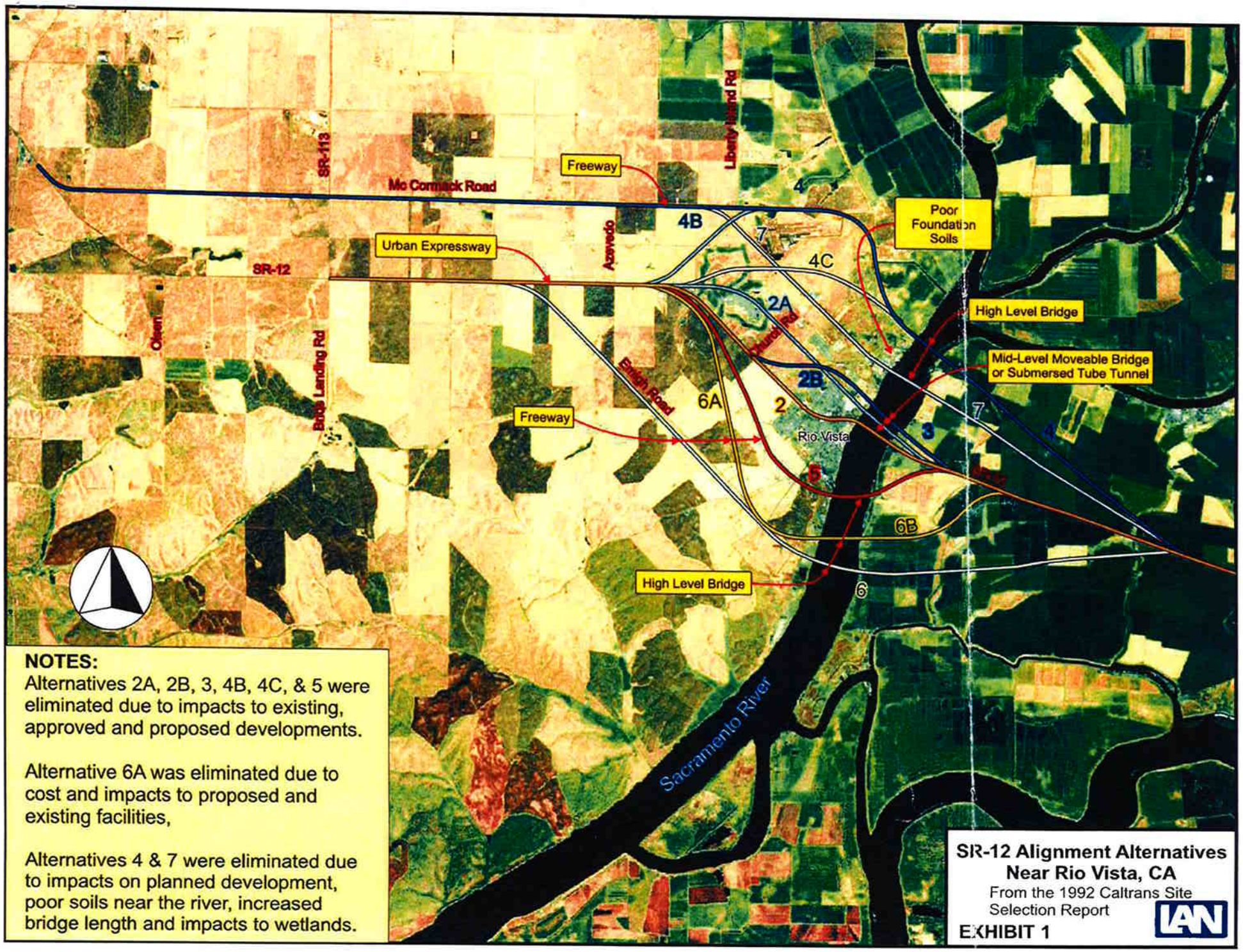


**NOTES:**

Alternatives 2A, 2B, 3, 4B, 4C, & 5 were eliminated due to impacts to existing, approved and proposed developments.

Alternative 6A was eliminated due to cost and impacts to proposed and existing facilities,

Alternatives 4 & 7 were eliminated due to impacts on planned development, poor soils near the river, increased bridge length and impacts to wetlands.

**SR-12 Alignment Alternatives Near Rio Vista, CA**

From the 1992 Caltrans Site Selection Report

**EXHIBIT 1**

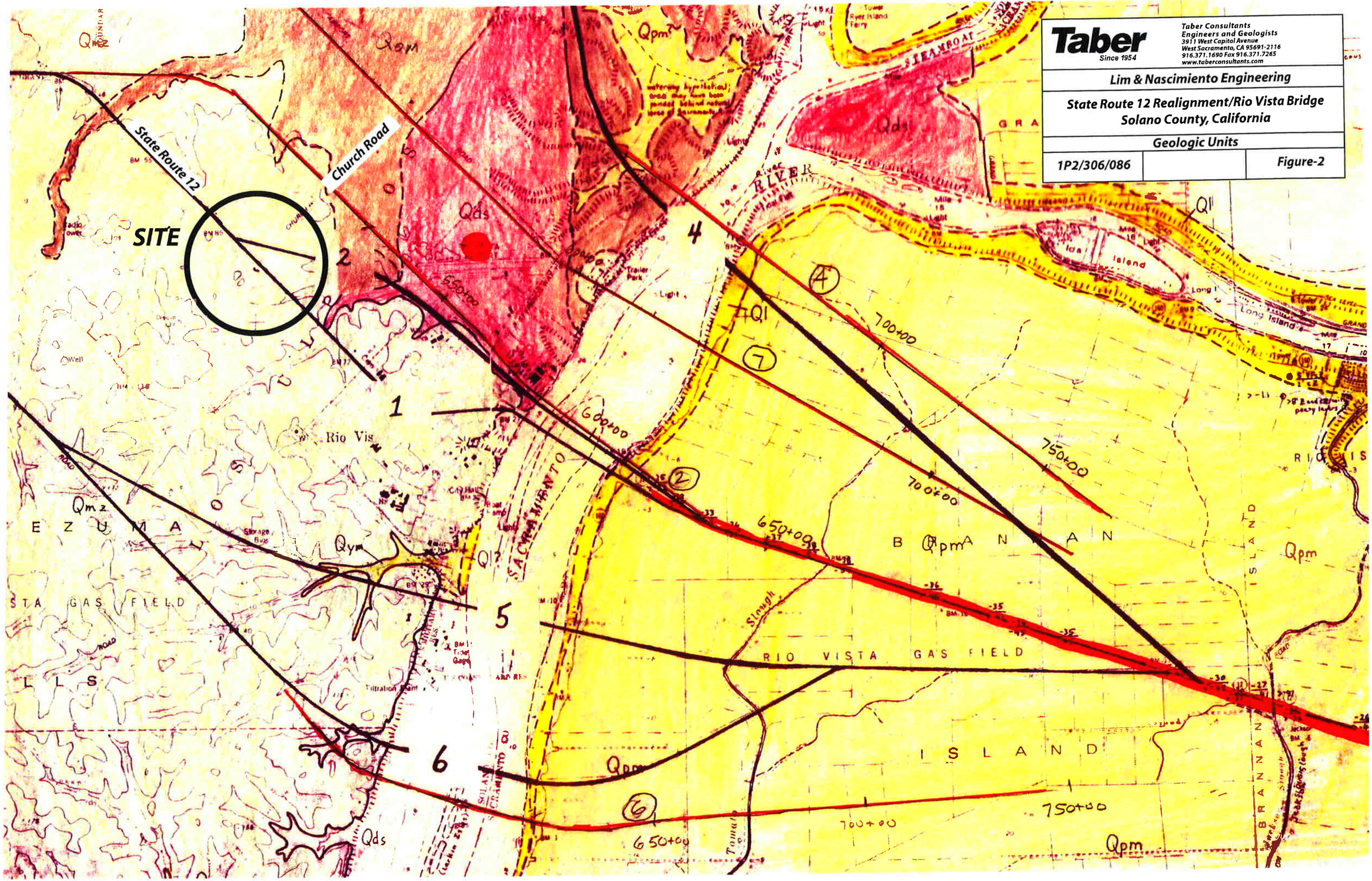


**Taber** Since 1954

Taber Consultants
Engineers and Geologists
3911 West Capitol Avenue
West Sacramento, CA 95691-2116
916.371.1690 Fax 916.371.7265
www.taberconsultants.com

**Lim & Nascimiento Engineering**

**State Route 12 Realignment/Rio Vista Bridge**
**Solano County, California**

**Geologic Units**

| | | |
|---|---|---|
| 1P2/306/086 | | Figure-2 |

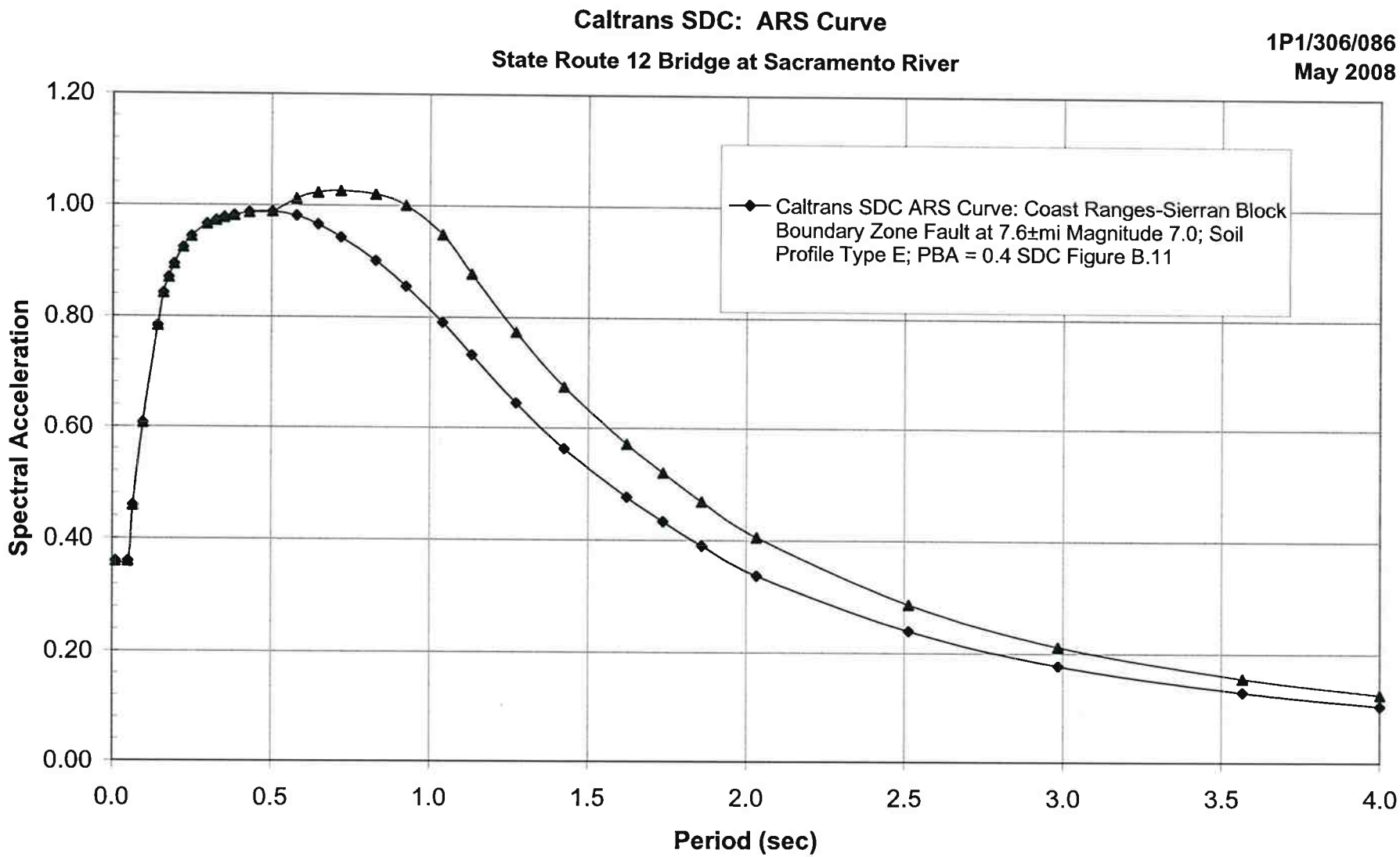


Figure-2

Taber
Since 1954